Adapter RS232 - 5V SIO

Powered from RTS and DTR
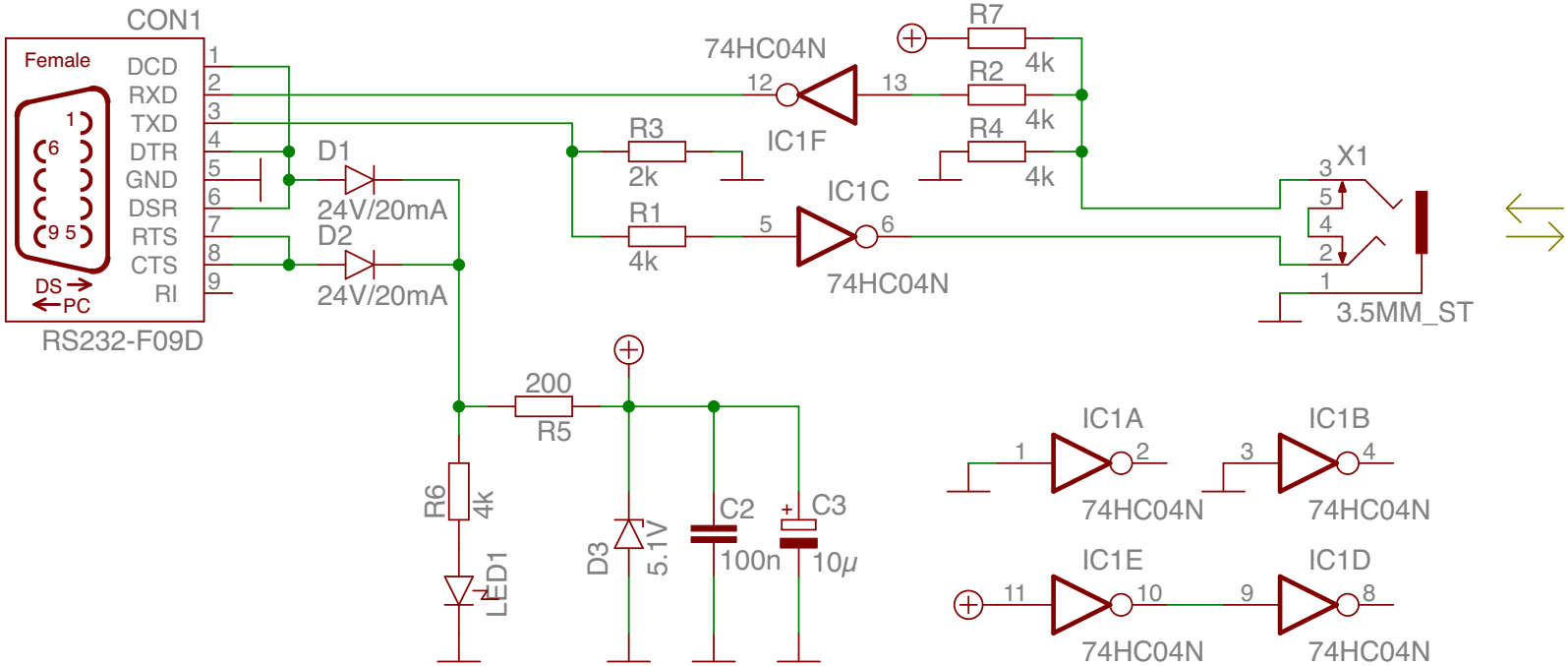
2010-03-09 Version 3.1