Minimalistic Z80 Microcomputer with SRAM for the K1-Bus

CC-BY-SA kio@little-bat.de Design start: 2014-01-28 Version 1.1 2014-08-07

Clock

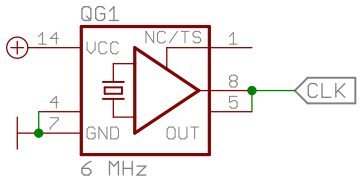

CPU Z80

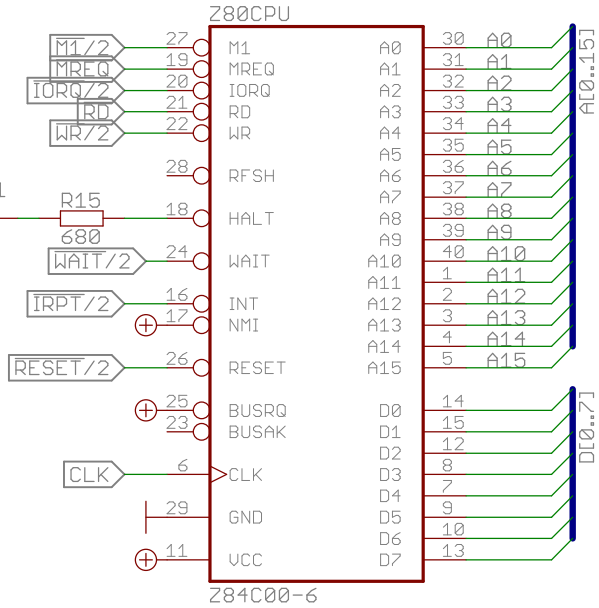

SRAM

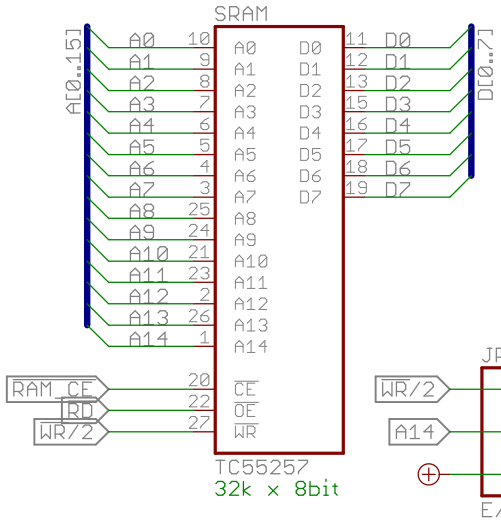

EPROM / EEPROM

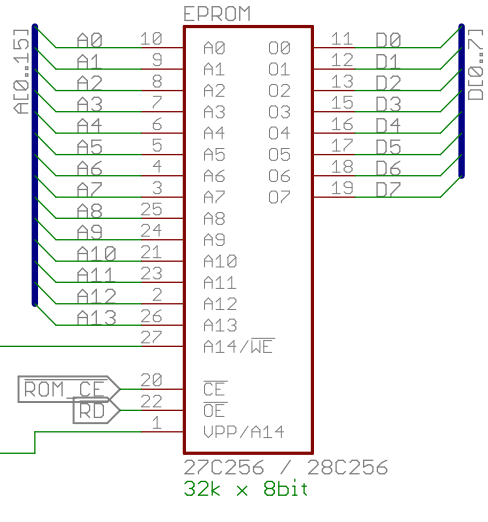

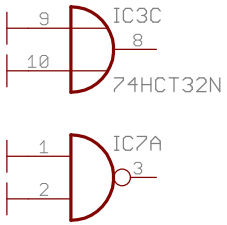

Power-on Reset and Reset Switch

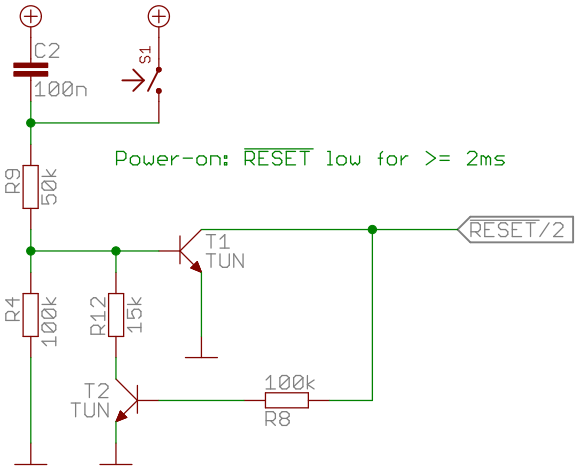

Init state FF

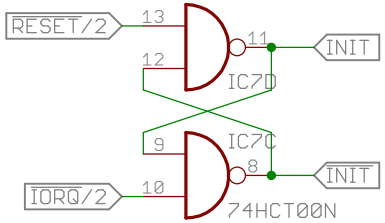

FF to indicate init mode after reset: During init mode all memory access is forced to access ROM in order to read the reset machine code from ROM. FF is set by RESET and cleared by first I/O operation.

Memory Enables

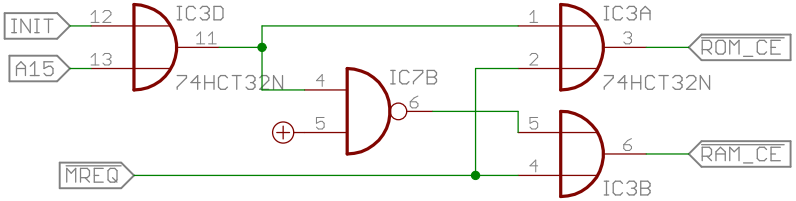

A15 is forced high during initialization to select ROM instead of RAM for reading opcodes from rom after reset