sinclair

PROJECT 80

Constructional and technical
information on Sinclair
project 80 modular
high-fidelity amplifier system.

Contents

Apology

We regret that, due to circumstances beyond our control, the layout and design of this first edition of the Project 80 manual has been rushed. We apologise for any resulting errors and inconsistencies but if you have any comments, criticisms or suggestions the author will be pleased to consider these when the next edition is reprinted.

Introduction

This manual describes Project 80 high fidelity modules for the home constructor. Part One deals with some complete projects for the home constructor and gives a pictorial layout of each, with a shopping list and details of some suppliers. Layout AE deals with Project 805 specifically.

The beginner is strongly recommended to follow one or other of these projects exactly, but the rest of Part One gives additional information on complete systems and hints for those who wish to depart from the suggested layouts.

It is not possible to list all the pitfalls that can occur but if commonsense is used and the hints are followed, even the complete beginner will be able to assemble his project into whatever case or system he wishes — and he will get excellent results first time.

When wiring the modules, you may find it helpful to colour the wires on our layouts. For instance, you could colour all the wires connected to the power supply +ve in red and say to the -ve in green. There will then be far less chance of a mistake when wiring.

Section A6 is about fault finding — just in case you do make a mistake in assembly, or something goes wrong. It includes a step-by-step chart which will help you find most likely faults.

Part Two of the manual deals with the individual modules, unit-by-unit. It gives circuit diagrams, performance and technical information, as well as listing many interesting and useful applications for the individual modules.

Section numbering

By its very nature, a modular system is flexible — new modules are announced from time to time. This manual is therefore planned so that there is a logical place for information on new modules. The manual is also laid out so that as far as possible it is in the order you want it — the first thing you will want is to assemble your new system — so the practical projects come first. Only if you are departing from one of these will you need the rest of Part One (with the exception of Section A1 which deals with mounting the modules).

Part Two is numbered as consistently as possible so that Sections BA2, BB2, CA2, etc. are all circuit diagrams, whilst BB6, CB6, DB6 are all information on power supply requirements. Where two modules have common information, e.g. tuner and decoder, which have identical power supply requirements, rather than include this information twice as BA6 and BB6, it is included as Section B6 — there are no Sections BA6 or BB6.

Z40 and Z60 have much common information included in Sections D5, D6, D7 and D10. The power supplies PZ5 and PZ6 are very similar so that common information on these is included as EA/EB when it does not include the PZ8.

Modules Available

The following list shows all the modules which are available, or projected, at the time of printing. The modules are grouped into four sections lettered to coincide with Part II of the manual: B signal sources, C preamps and control units, D power amplifiers E power supplies and F other modules.

Modules in groups B C & D are intended to work from a power supply of group E or from any other source of voltages between 25 and 35 (some modules down to 12v and some up to 55 volts). The power supply should be chosen in conjunction with the power amplifiers: it will also drive whatever preamp modules you choose.

B Signal sources

BA FM (VHF) Tuner intended to receive FM transmissions, 88MHz to 108MHz.

BB Decoder intended to be used in conjunction with the tuner to convert it to stereo reception.

These two modules could be installed (with a PZ5) to work with an amplifier other then a project 80.

It is also possible to use the decoder with tuners other than the project 80 tuner to convert them to stereo.

C Preamps and control systems

CA Project 80 Preamplifier. A stereo preamp/control unit. It is the heart of any amplifier made from project 80 modules.

CB Active Filter Unit (AFU). An optional addition to extend the basic facilities of the project 80. It is intended to improve performance where old records are used, or when cheaper turntables are used.

CC SQ Decoder. For quadraphonic sound an SQ decoder, two more power amps and possibly a second power supply are added to the existing stereo unit. The decoder also has its own tone and volume controls for the rear channel. The decoderis covered by a separate manual.

D Power amplifiers

DB Z60 for all systems up to25W (8) or 40 W with 4 . For higher powers (up to 50W into 15 or 80W into 8) two Z60's can be used back-to-back. The full advantage of a Z60 over the Z40 can only be realised when using PZ8 to power the system.

DA Z40 for all systems up to 18W RMS into 4Ωspeakers.

E Power supplies

EA PZ5 suitable for smaller domestic situation of 5 + 5W stereo or 10W mono.

EB PZ6 a higher powered version for up to 25W total output (12W + 12W into 8 Ω).

Z40's will normally be used with PZ5 or PZ6. Although Z60's can be used, there is no advantage unless a PZ8 is chosen. PZ5 and PZ6 are both mains operated and (220-240 volts) and can be adapted for 110-120v operation.

EC PZ8 a high powered voltage stabilizer with sophisticated protection circuitry built in, and performance tailored to match two Z60's working into 8 Ω, delivery 25 + 25W. The PZ8 can also power other combinations but the total audio outputs from it will be limited to about 50W (e.g. 50W on mono, or 25 + 25W stereo, or 4 x 12½W on quadraphonic).

The PZ8 is not mains powered and requires a separate transformer rated at 40V, 2A.

F Other parts

FA Masterlink a connecting panel with output and input sockets fitted.

FC Switch module containing a mains switch and neon indicator.

These two modules are included in the Project 805 which also contains the Project 80 Preamplifier 2 Z40's and PZ5 with ready tagged wires to allow solderless assembly. Project 805 is covered in layout EA.

AB 1 PZ6/Z40 layout

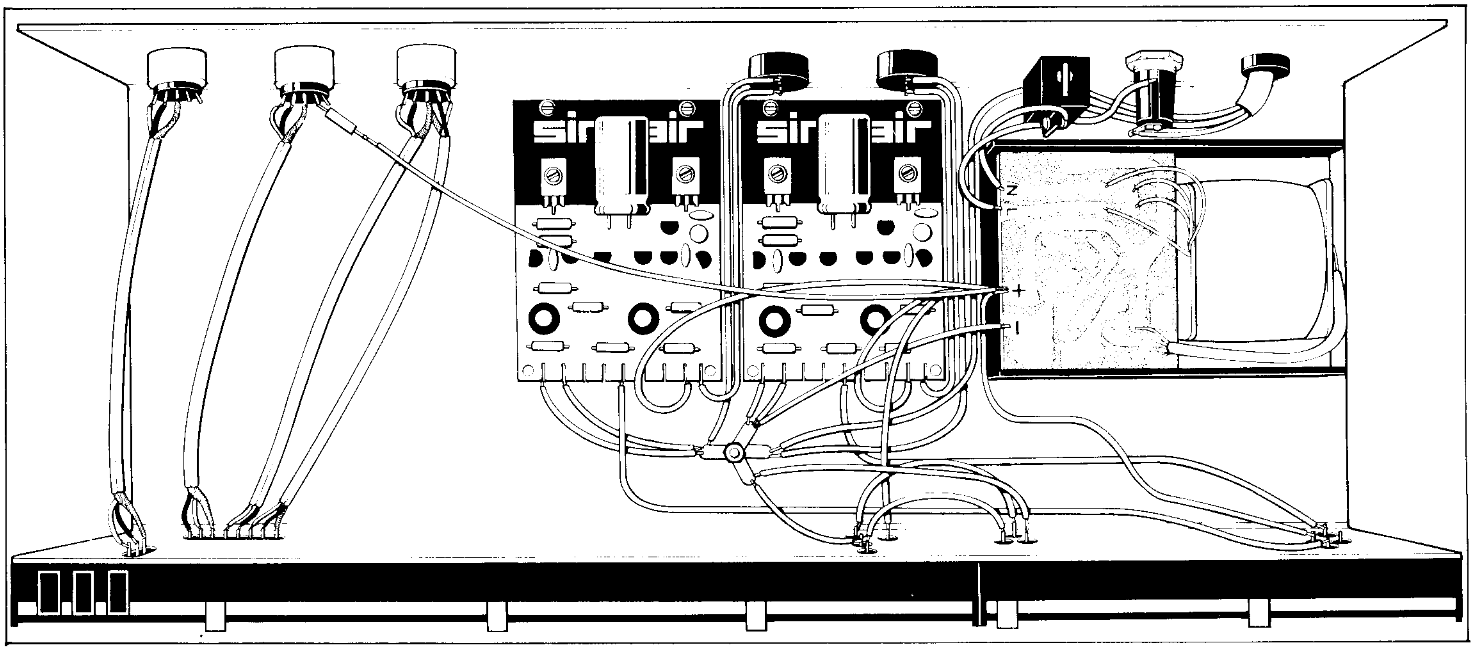

Part 1: Complete Systems

AB 25w stereo amplifier using PZ6

AB2 Shopping list

2	Z40
1	Project 80 Preamplifier
1	AFU (optional)
1	PZ6 (or PZ5)
1	Cabinet, metal, 19" x 6" x 2" approx.
3	5 pin 180° (A type) DIN sockets and plugs
2	2 pin DIN speaker sockets and plugs
1	2 pole mains switch (toggle type)
1	Miniature panel mounting fuse holder
1	Cable clamp (for mains cable)
2	Heatsink blocks (for Z40 mounting)
1	Resistor (120Ωlw) for tuner + ve feed (PZ6 only) (see note 2)
22	6BA x ¼" screws (see note 1)
18	6BA nuts
1	6BA ¾" screw (for earth point)
6	6BA solder tags
1 yd	stereo microphone cable
1 yd	stereo microphone cable
3 yds	assorted colours flexible wire
as required:	3 core mains cable

Suitable cabinets are available from: H L Smith & Company
278 Edgware Road
London W2
(Plain aluminium chassis, undrilled)

NSMHC Sales Limited
(National Society for Mentally Handicapped Children)
17 Pembroke Square
London W2 4EP
(Aluminium chassis with slide-on wood surround)

West Hyde Developments Limited
Ryefield Crescent
Northwood Hill
Middlesex HA6 1NN
(Black cabinet with wooden end panels punched ready for various combinations of modules)

West Hyde can also supply all hardware, etc., to suit their cabinets or your local shop should be able to supply all the required items.

AB3 Notes

1. The Z40s are mounted on heatsink blocks as shown in fig A1.2. The nuts and bolts indicated above assume that the block has 6BA tapped holes – if you use nut and bolt fastening for the blocks you will need 8 less ¼" screws and four extra 1" screws and nuts (for ¾" block).
2. The box is wired so that the complementary tuner (Section AD) plugs into the tuner socket and draws power from the amplifier, therefore there is a connection from PZ6 + ve to Pin 4 on the tuner socket to provide h.t. This wire should only be fitted if a tuner is to be used.

   The resistor shown in this + ve feed line is not required when a PZ5 is used.
3. Using a PZ5 instead of the PZ6 will reduce the output power (see section E4) but will have little other effect except for a slight increase in hum level when using the tuner/decoder.

AC A stereo record player (and tuner) using PZ5

AC 2 Shopping list

2	Z40
1	Project 80 Preamplifier
1	Project 80 tuner } optional
1	Project 80 decoder } optional
1	PZ5
1	Plinth with deck
1	100μF 25V capacitor (for tuner and decoder)
1	5 pin DIN socket
2	2 pin DIN speaker socket
1	Coax aerial socket
1	Panel mounting fuseholder
1	double pole mains switch
1 metre	stereo microphone cable
3 metres	assorted colours flexible wire

AC 1 PZ5/Z40 plinth layout

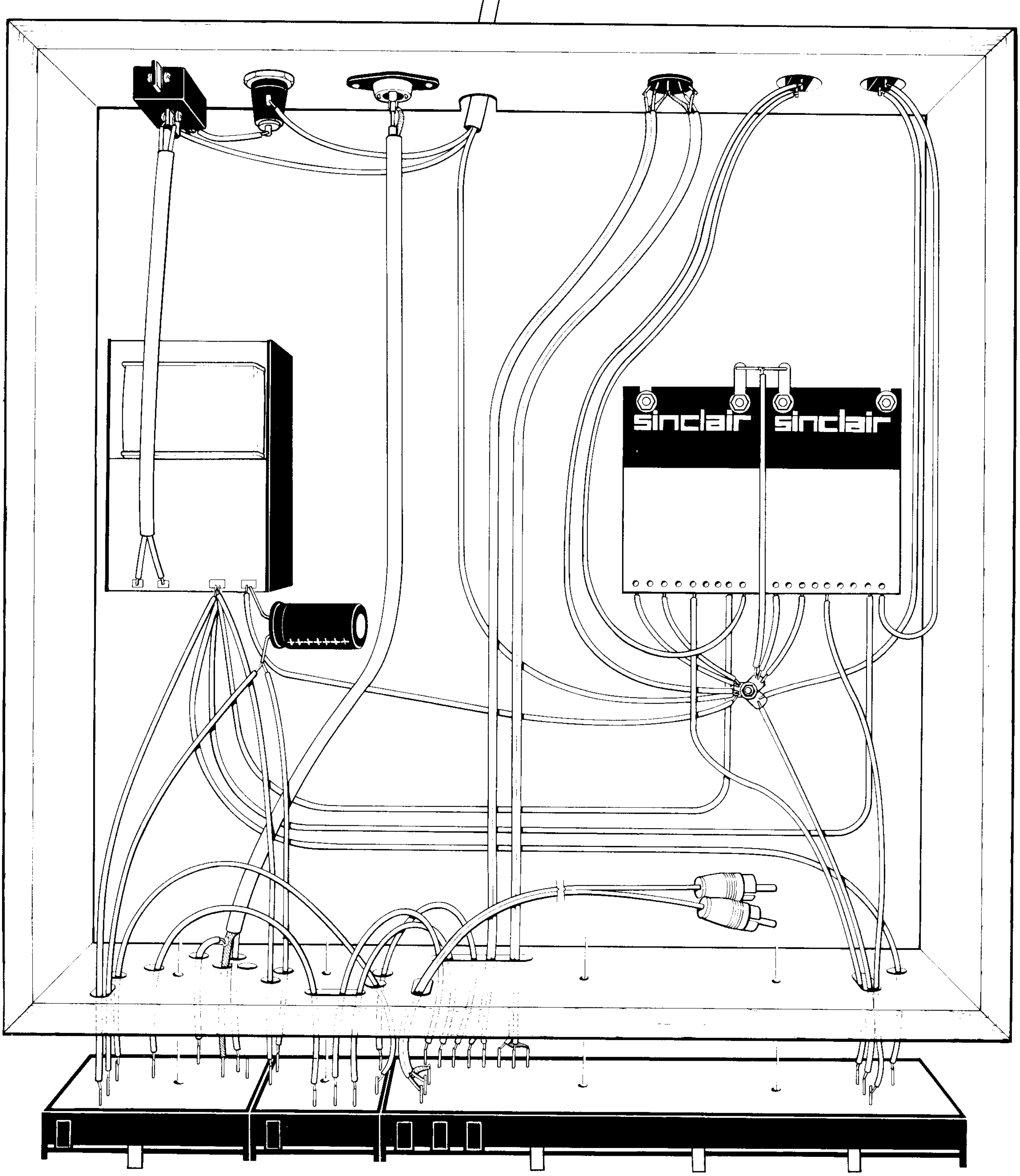

3 metres	mains cable
	aluminium foil for lining
4	6BA ¼" screws
5	6BA 1" screws
4	6BA ½" spacers
18	6BA nuts
6	6BA solder tags

AC3 Notes

1. The plinth we use in this example is the BSR McDonald AP1, suitable for HT70, MP60 and 610 decks. It measures 405 x 370 x 88mm approx. When choosing an alternative plinth make sure it is the same size.
2. In order to minimise hum, the inside of the plinth, where the preamplifier, tuner and decoder fit, should be lined with metal

foil. Aluminium cooking foil is very suitable. Use a contact adhesive to glue a layer inside the cabinet before drilling. After drilling remove any burred foil to prevent short circuits. A solder tag should be placed under one of the screws used to fix the preamplifier and a wire run from this screw to the earth point. This tag will then earth the foil, reducing hum. Make sure the foil cannot touch onto any of the connections or modules: PVC tape can be used as an insulater anywhere this is possible — especially around the connections to the Z40 (and to the masterlink in project AE).
It is also a good idea to glue an area of foil underneath the Z40's earth point and wiring. If this is done it will effectively earth the Z40 heatsinks to the earth point and the wire shown connected to these heatsinks can be omitted.

3. The PZ6 or 8 are not advised for plinth mounting because of difficulties of heatsinking (see section D6.3).

AD A stereo tuner (for use with AB)

AD 1 Tuner layout

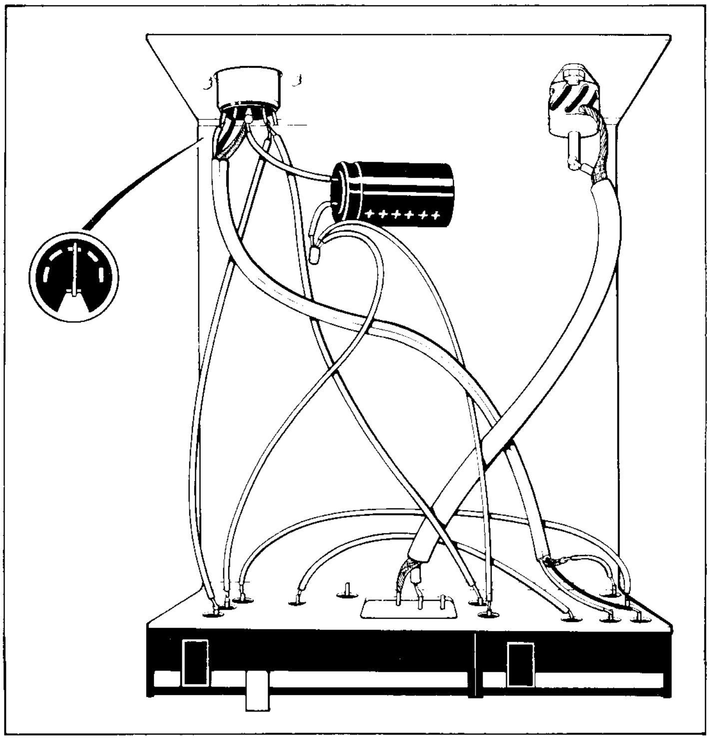

AD2 Shopping list

1	P80 tuner
1	P80 decoder
1	chassis
1	1000μF 25V capacitor (see notes)
1	coax aerial socket
1	5 pin DIN socket
20cm	75Ωcoax cable
20cm	stereo microphone cable
1 metre	assorted colours flexible wire
4	6BA ¼" screws
4	6BA nuts

The suppliers listed in section AB 2 can supply a tuner box to match their amplifier box.

AD3 Notes

1. The tuner takes its power from the amplifier. The interconnecting lead must be wired with a through connection on Pin 4 to provide this power. The diagram shows how each plug is to be connected on this lead.
2. The 1000μF capacitor shown should not be needed if the main amplifier uses a PZ6 or other stabilized power supply.

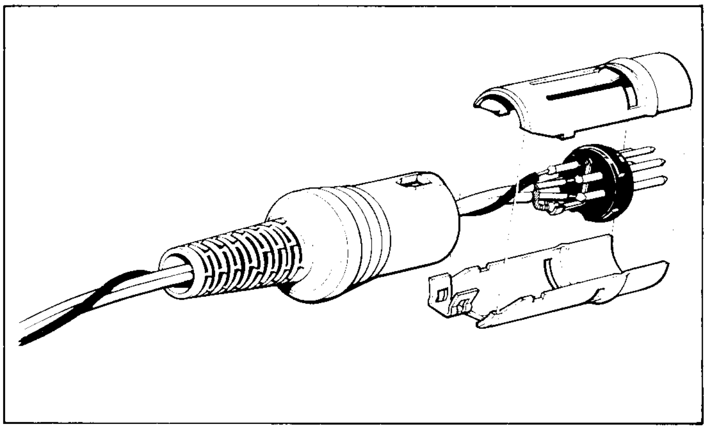

AD 3.1 DIN plug wiring

3. The tuner box could be increased in size to contain a built-in PZ6 or 5, this will require a fuse, double pole switch etc.
4. When using the tuner, powered from an amplifier other than that of section AB, hum could be a problem even with the 1000μF capacitor. It may help if the negative connection of the tuner is taken via a separate wire (perhaps using Pin 1 of the socket) to the amplifier's main earth point.

AE Project 805

AE2 Parts List

The following components are supplied in the Project 805 — identify them all before starting assembly:

Item	Quantity	Description
1)	1	Masterlink
2)	1	Project 80 preamplifier
3)	1	PZ5 power supply
4)	2	Z40 amplifiers
5)	1	Mains switch unit with wires
Wires: items 6 to 13 are all packed in one bag.		
6)	1	Green harness (6 wires, 380mm maximum length, joined to eye tag) for earth (-ve).
7)	1	Red harness (7 wires, 430mm max, joined to eye tag) for + ve wiring.
8)	2	Yellow wires (255mm long) (Pins 9 on Z40s to A & B on masterlink)
9)	2	Violet wires (220mm) (Pins 14 & 15 on preamp to pins 5 on Z40s)
10)	1	Violet/yellow/green twisted, 660mm, for pickup connection, masterlink to Preamplifier.
11)	1	Violet/yellow/green twisted, 460mm, for radio connection, masterlink to Preamplifier.
12)	1	Five wires twisted, 460mm long, for tape connections, masterlink to preamplifier.
13)	1	Five wires twisted, 355mm, with 2 phono plugs and 100mm pigtail, for pickup connection, deck to masterlink.
14)	1	Grey 3 core cable for mains connection, 2 metres long.
Extra wires: items 15 to 17 are all packed in one bag.		
15)	5	Yellow wires 150mm long. These are for signal connection between tuner and decoder (1 wire), decoder and preamplifier (2 wires), preamplifier and AFU (2 wires), if these extra units are fitted.
16)	3	Green wires 150mm long. These are for earth connections, decoder to tuner, tuner to preamplifier and preamplifier to AFU.
17)	1	Yellow V-shaped wire, 380 + 150mm long, for decoupling connection (E on masterlink) to tuner and decoder pins 2.

AE 1   P 805 layout

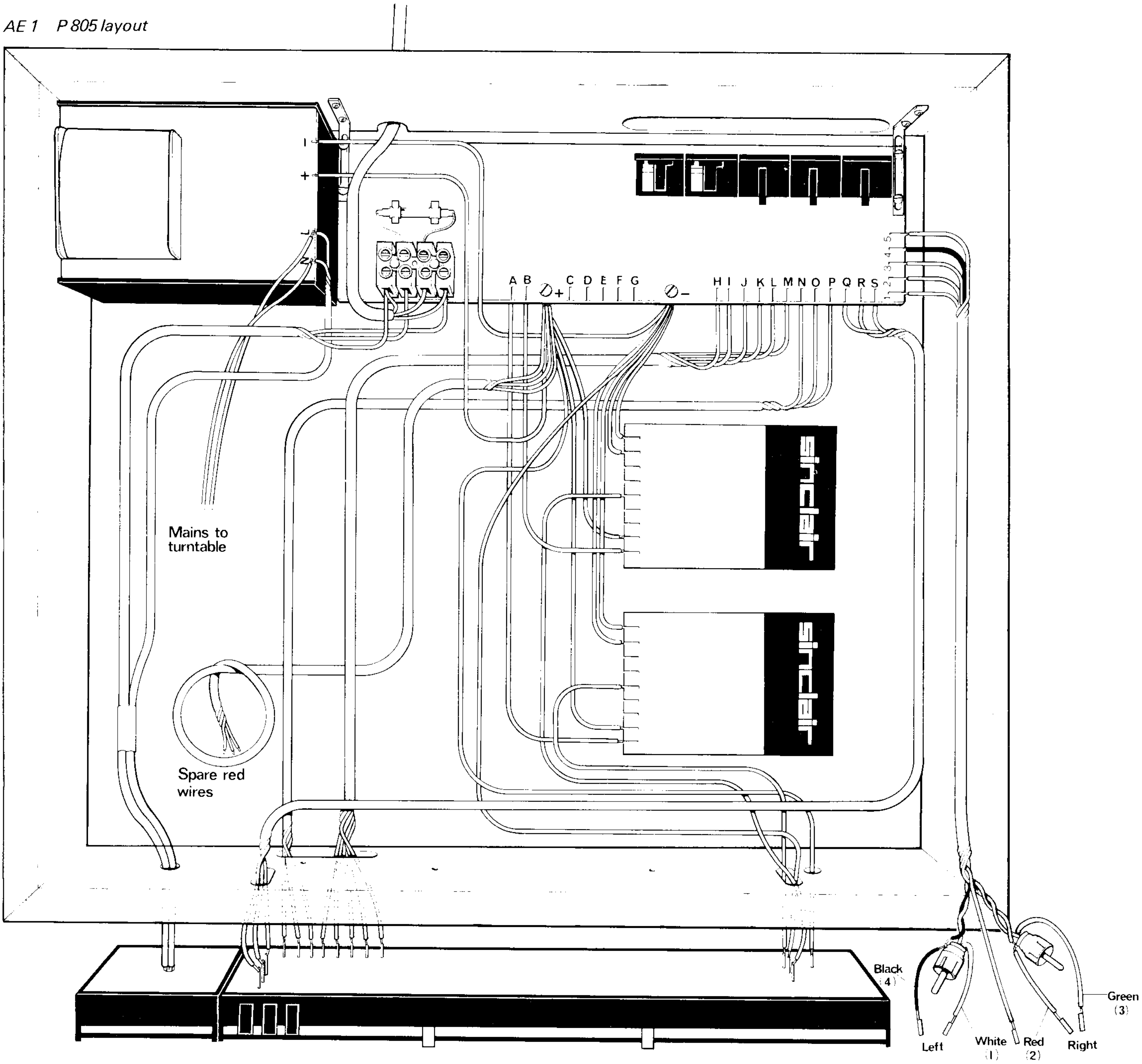

Hardware

18)	4	6BA spacers	
	4	6BA ⅞ screws	
	4	6BA flat washers	
	4	6BA nuts	for mounting Z40s
	4	6BA shakeproof washers	
19)			
19)	3	6BA 1½" nylon studding	
	3	6BA fibre washers	
	3	6BA nuts	for mounting preamplifier
	3	6BA shakeproof washers	
20)	1	each items as 19 for mounting switch unit	
21)	2	Angle brackets	
	8	6BA ½" screws	
	8	6BA nut	for mounting masterlink
	8	6BA nuts	
	8	6BA shakeproof washers	
22)	4	Self-tapping screws for PZ5	for red and green harnesses
23)	2	4BA ⅝" screws	
	2	4BA nuts	

Letters and numbers in brackets refer to connections to masterlink.

AE 1.1   Connection detail to Stereo 80

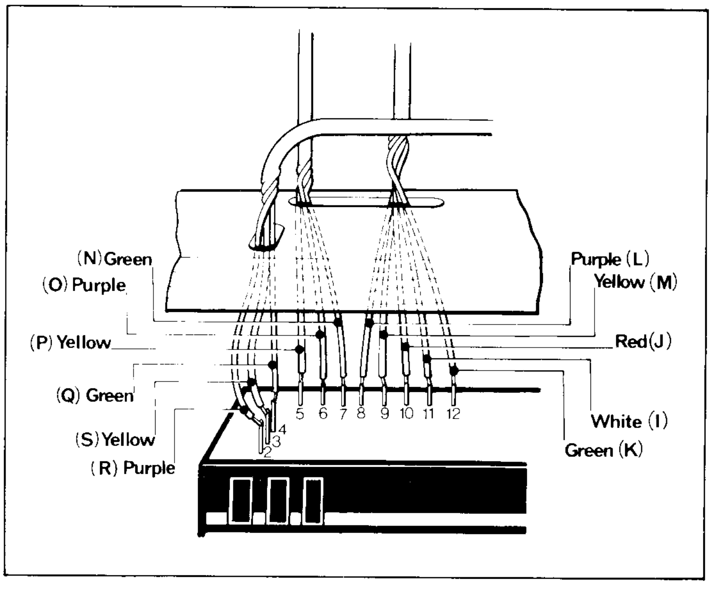

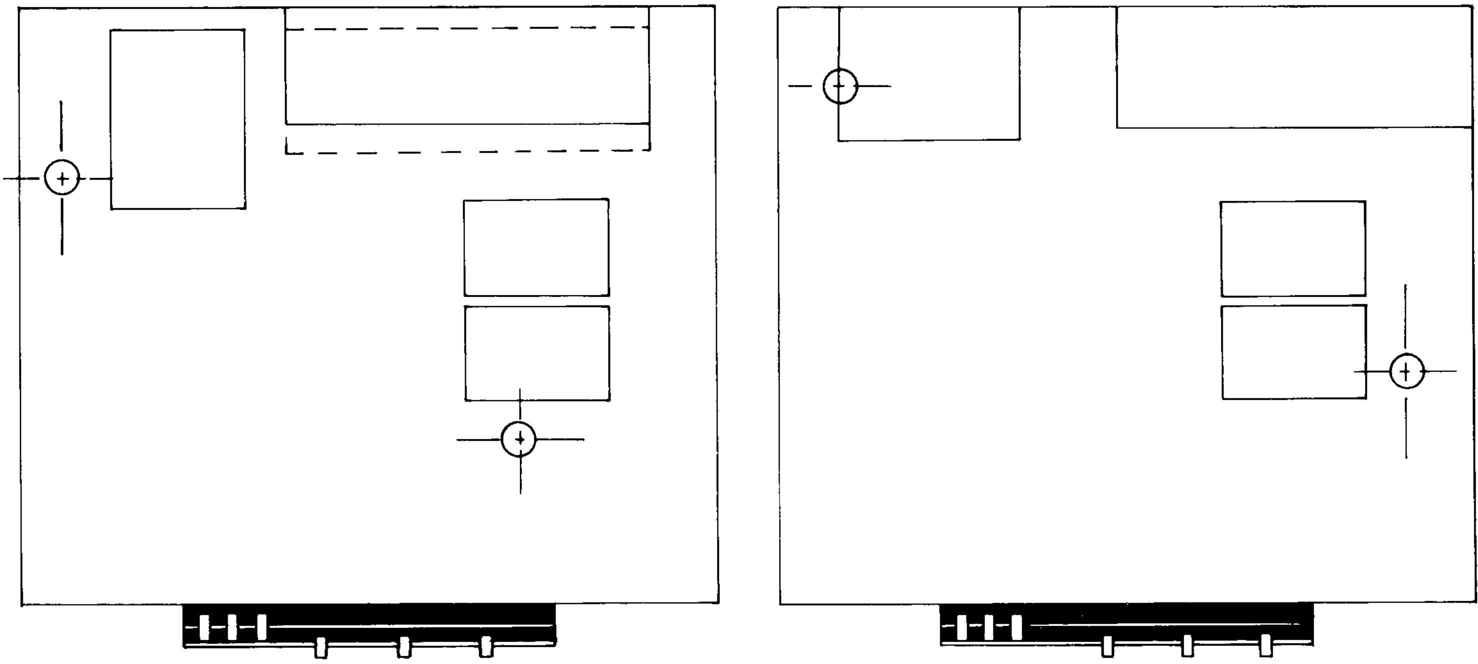

AE 3.1

AE3 Notes

1. The plinth we use in this example is the WB1 for the SP25 Mark III. You can use any similar plinth, including the plinth used in layout AC. The diagrams above show suggested positions for the WB1 plinth and the AP1 plinth.
2. It is good practice to line the inside of the plinth with foil as explained in AC3.2. The area around the masterlink should also be lined.
3. **Wire lengths** in our drawing have been 'tidied up' slightly for clarity. It is, however, important that they are loose — do not twist or tape wires together unless we supply them twisted. The only exception to this is that the spare wires on the red harness can be twisted and taped together out of the way as we have shown them, or if you prefer, you can cut these spare wires off completely.
4. **Deck connections.** The wire to connect to the deck has phono plugs and push-on connectors since different makes of decks have different means of connecting. If you use the phono plugs, then cut the 'pigtails' which are not used off. If you use the push-fit connectors, tape the phono plugs up carefully so they cannot touch anything inside the plinth.
5. **Mains connections.** The push-fit tags for the PZ5 (the wires are already connected to the switch unit) have pigtails to connect to the deck mains connections, so that the switch unit operates deck and amplifier. Connect these as instructed by the deck manufacturer. If you are not using them cut them off completely.
6. **Adding tuner, decoder and AFU** can be done using the extra wires (items 15-17). Connections for these extra modules are as shown in AB1 (AFU) and AC1 (tuner and decoder). Positive supply wires (to pin 1) are already included attached to the red harness.
7. **Adjustments**
Once the project is working, the sensitivity of the tape input may be adjusted by means of RV3 and RV4 (see FA3 for positions) to give best results.
With some higher output magnetic cartridges the links shown in fig. AE37 may be broken to give improved matching.

AE 3.7 Detail of break in p.u. trock

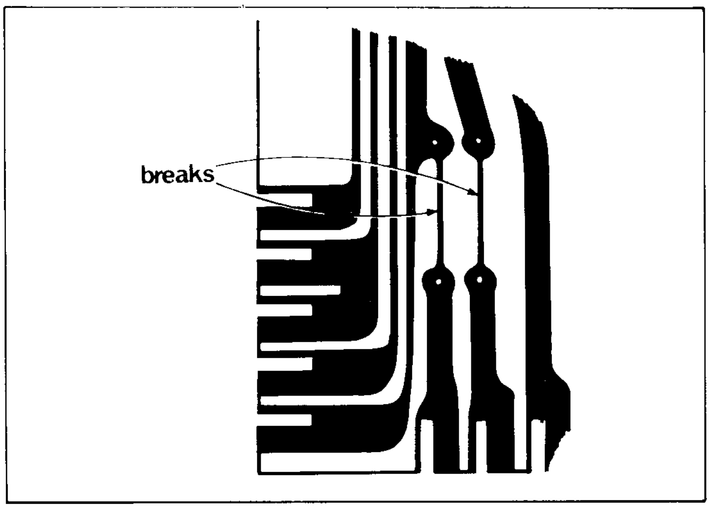

A: Additional information on systems.

A1 Mounting Instructions

A1.1. Preamps, tuners and control modules

These are all styled in the same way and the fixing of all of them is identical, by means of 1,2 or 3 6BA screws which pass through the panel to which the module is fixed and into the rear of the module itself.

The panel may be of metal, wood or plastic with very little affect on the performance, although if a wood or plastic cabinet is used it is a good idea to line the inside with foil as described in section AC3.

It is vitally important, when using metal, to make sure that no part of the rear of the control module can touch the metal and therefore some type of insulator must be put between module and metal.

Your local DIY shop will be able to sell you some vinyl upholstery material about 1 or 2mm thick — this is ideal as you can glue a layer over the metal after drilling and make holes through it as necessary You can also use an off-cut of formica or other laminate, glue it on before drilling and use the template to drill through both.

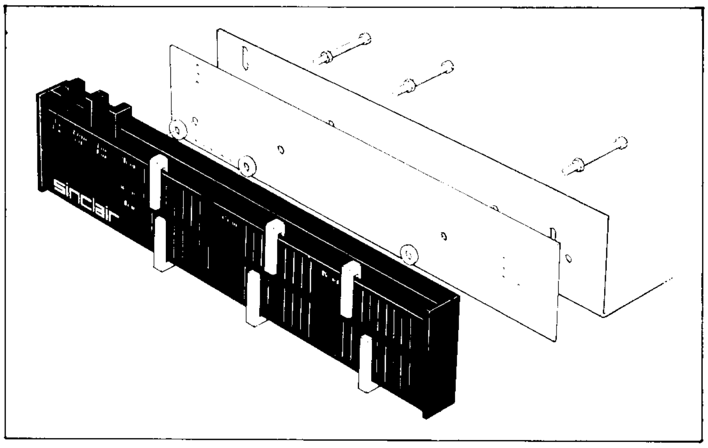

A 1.1 Stereo 80 mounting

The diagram shows how a preamplifier is mounted, note the metal chassis and a 'card' of insulation. Note also the fibre washers used between the chassis and the stereo 80 which stop bending of the module when the screws are tightened. The screws supplied have a nut on them to allow for different thicknesses of panels.

A1.2. Z40, Z60 and PZ8

All these modules have the same sort of mounting, by means of two holes in the edge of a black metal fin. When the module is working hard this fin can get very hot and the mounting must allow the heat to get away from the module, so the mounting is partially mechanical and partially for heat transfer. The metal onto which the mounting is made conducts the heat away — this is called heat sinking.

The amount of heatsinking needed is entirely dependant upon what power supply you use, what speakers you have and at what volume level you use the equipment.

For normal domestic listening, using PZ5, you will need no heatsink.

In our layouts for the PZ6/Z40 and PZ8/Z60 systems we use a metal block to provide firm mounting and good thermal conduction through to the metal cabinet which is the heatsink.

Additional details of heatsinking are given in section D6.3.

The diagram shows how a Z60 can be mounted on a heatsink block, made from 20mm (¾") square aluminium bar. Also shown is a method of mounting using metal spacers — this does not give any heatsinking so is really only suitable when using a PZ5. We use this method with Project 805.

Alternately two Z60's can be mounted on one block (the Z40 is a little too fat for this) as shown in fig. DB 9.2.3.

A 1.3 PZ5 and PZ6

These modules are mounted by means of screws through the base of the cabinet and the holes in the bottom of the power supply.

The PZ5 and 6 are very heavy items so remember (especially if you have mounted it onto the hardboard base of a record player plinth) that the mounting will break loose if the amplifier is dropped.

A 1.4 Templates

Page 31 contains templates for mounting the modules.

A2 Choice of cabinet

Project 80 is very versatile and can be built into many different cabinets. Metal is the material which causes least problems but wood or plastic can be used. With wood (and to a lesser extent with plastic) hum can be a problem if care is not taken. Wood and plastic will not give any heatsinking.

The modules in this manual, in so far as cabinets are concerned, can be grouped into three sections:

Tuner and decoder
Preamp and AFU
Power amplifier and supply

Three separate cabinets can be used for the three groups with no problem — but do not separate within the groups — in particular keep the power supply in the box with the amplifiers.

The tuner and decoder are not critical of mounting materials, but if metal is used a window must be cut to avoid upsetting the alignment. The window is shown in the template.

It is a good idea, if wood or plastic is used for the tuner or preamp mounting, to line the inside of the panel with aluminium foil, which should be earthed (see section AC 3). This earthed metal will help reduce hum.

The power amplifiers should be mounted on metal for heat-dissipation. See sections A3.2. and D6.3.

Several commercially available cabinets are available for project 80, addresses of suppliers are given in section AB2. In particular West Hyde market three cases, ready punched for combinations of power supplies and amplifiers.

Case A: front panel for tuner, decoder, stereo 80 and AFU will accept PZ8 + transformer, or PZ5/PZ6, Z40s or Z60s and/or a project 805 with masterlink.

A 1.2 Z40 mounting

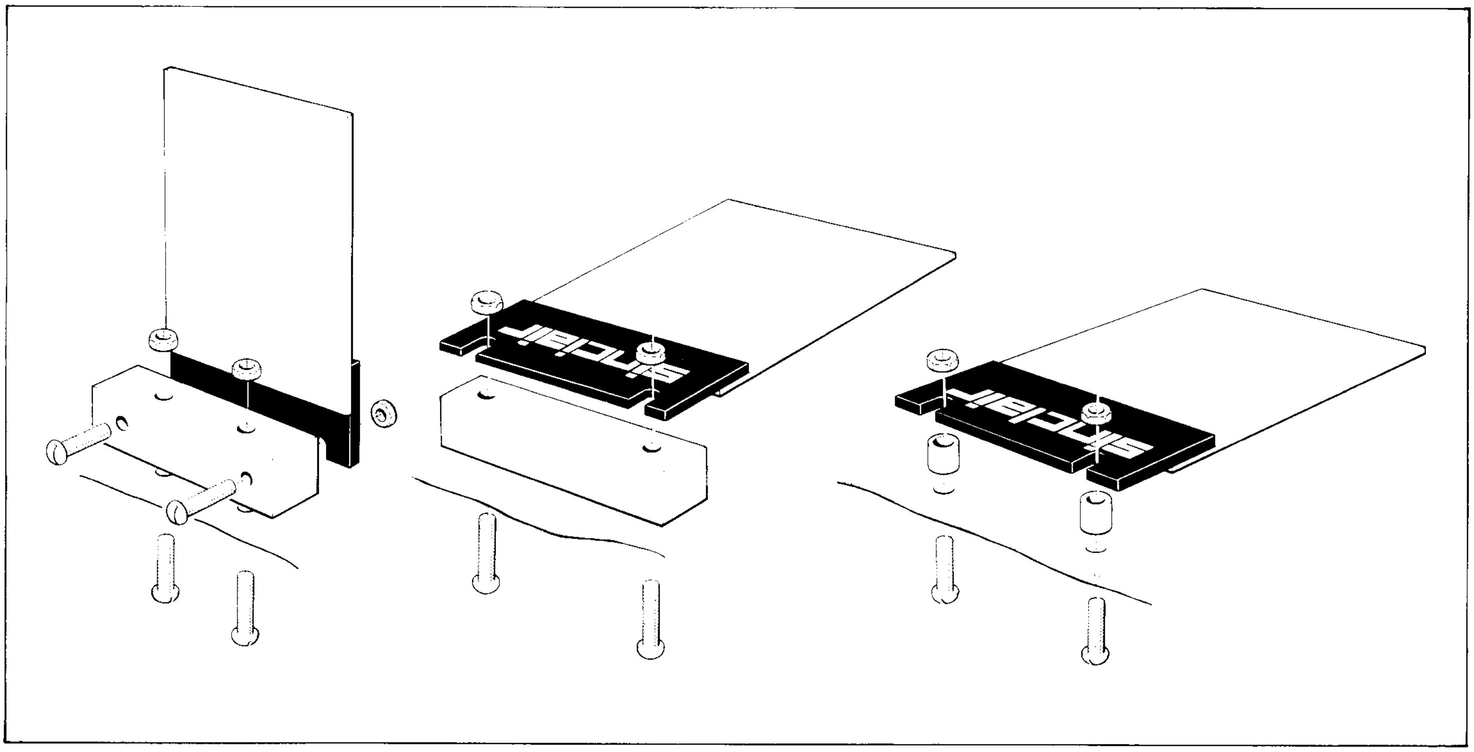

Case B: front panel for stereo 80 & AFU only but will accept other combinations as case A.

Case C: front panel for tuner and decoder only, room for PZ5 or PZ6.

West Hyde can supply a transformer for the PZ8 and all hardware for the amplifier cases, which will be ready punched.

Holes indicated ⊕ should be ⅛" (3mm) diameter. The large hole on the switch unit should be ¼" (6mm) and all other holes $\frac{3}{16}$" (5mm). See page 31 for templates.

A3 Positioning the modules

A3.1. Preamp and AFU, tuner and decoder

The positioning of these will naturally be determined by the cabinet which is chosen.

The Stereo 80 is the module which is most used and is the heart of the system so this will probably be placed centrally, with the other modules around it. (e.g. tuner and decoder to the left, AFU to the right).

Remember that the input wires to these modules are sensitive to induced hum so do not place them where these wires will pass near to mains transformer and wiring, or to turntable motors, or near the outputs of the Z40/Z60.

In our layouts (AB & AC) we keep all mains wiring in the back right (or left) hand corner well away from the preamp.

A3.2. Z40 and Z60

The two power amplifiers should be positioned close to each other (two can even share the same heatsink block as shown in section DB9.2.2.). Keep them away from the input sockets, wiring and connections to the preamplifier, to avoid interaction.

A3.3. Earth point

A point should be chosen mid-way between the Z40's or Z60's to which all earth wires are run, separately. Position this so that wires to terminals 1 and 2 (and 3 on Z60) of the amplifiers are no longer than 3". Separate wires are also run to the earth point from:

power supply -ve
speaker sockets
mains earth
AFU earth
Preamplifier earth

Do not 'double up' on any of these wires.

It is usually convenient to form this point from several solder tags, as we have, which are screwed down to the chassis for support (and to make electrical connection to the chassis). It does not have to be screwed down but, if it is not, a separate wire should be connected from it to the chassis (or metal earthing foil).

Note in layout AC we have run a separate wire to earth the metal heat fins of the Z40s — this of course is not necessary if a metal chassis is used since earthing will then be done automatically through the mounting.

A.3.4. Power supply

The PZ5, 6 or 8 will be mounted near to the Z40s or Z60s so that the positive and negative wires are not longer than about 6". This length is less critical with the PZ5 and more with the PZ8. In our layout AC these wires are about 12" long, which is satisfactory with PZ5.

The PZ5 or 6 will also require positioning so that the transformer is kept away from input and other wiring (or it can induce hum) and so that mains wires and connections are neat and together.

The PZ8 is not so critical — the transformer can be mounted some distance from the PZ8 (there are no mains connections on the PZ8 itself).

If the +ve and -ve wires from the power supply are too long it can cause distortion. If this occurs then a second point can be chosen, similar to the earth point but isolated from the chassis. A 1000uF 50V capacitor should be connected between this H.T. point and the earth point, and all H.T. wires are now run to the H.T. point instead of direct to the power supply which now connects through a single, longer wire to +ve H.T. point.

A3.5. Mains wires

Mains wiring is potentially dangerous. It has 250V present and if by accident this is applied anywhere other than the correct terminals on the power supply it will be destructive.

Mains Live (Brown) connects direct to the fuse: the other connection of the fuse goes through one pole of the on/off switch to the L connection on the PZ5 or 6 or to the 240 volt input on the PZ8 transformer.

Mains Neutral connects through the second pole on the switch to N on the PZ5/6 or to 0v on the transformer primary of the PZ8.

Mains earth (green/yellow) connects direct to the main earth point in the amplifier. If a turntable or other mains powered item is to be used, operated by the same switch as the Project 80, then the mains wire should be taken from L and N on the PZ5/6 via a suitable plug and socket if required, to its mains connection.

ON NO ACCOUNT MUST ANY MAINS CONNECTION BE MADE TO ANY OTHER MODULE

Because of the high voltage, and the possibility of inducing hum, mains wiring is best kept well away from the rest of the amplifier. Care must be taken if the mains switch is to be mounted on the front of the amplifier, see also section A5.3.

A3.6. Output wiring

From pin 9 on the Z40 or Z60 the output wire connects (via a 2000uF capacitor on the Z60 only) to the output socket, and to any headphone sockets you may have fitted.

If any of this wiring is anywhere near the input wiring of the preamplifier, or any other modules, interaction can occur as some of the output signal will then feed back to the input. Keep output well away from the input and also twist the output earth and live leads together.

A3.7. Input wiring

Should usually be screened — but if it is short (4" or so) and does not pass near any mains or output wiring, screening is not necessary. Thus, in our plinth layout we have not used screened wires from the tuner to the Stereo 80, but we have used screened wire from the pickup.

A4 Use of other modules in our layouts

A4.1 Z40 or Z60

The Z60 is longer than the Z40. It also requires an additional fairly bulky output capacitor (see section D.5). The output capacitor is part of the output wiring and must be treated accordingly.

It should be noted that there is no advantage in using the Z60 instead of the Z40 unless a PZ8 is used, although with 15Ωspeakers and a PZ6, the supply voltage can be increased to about 40 to give a useful power increase.

A4.2. PZ5 or 6

These are physically and electronically interchangeable. However, when using a PZ6, additional heatsinking will be required (see section D 6.4.). The PZ6 will result in a slight improvement in hum level when the tuner is used.

A4.3. PZ8

The PZ8 is not physically or electrically a replacement for the PZ5 or 6 and the transformers commonly available for the PZ8 are large (about 10 x 8 x 8cm). If the transformer is to be housed in the same case then this will need to be considerably larger than the PZ5/6 case. The PZ8 must not be used with Z40s unless its output voltage is reduced (see section EC6) but if this is done it does result in a considerable improvement in performance.

The PZ8 also should be chosen where sustained high power operation is required. PZ5 and 6 are small and after a while get quite hot at higher powers. It is, of course, quite possible to mount the PZ8's transformer remote from the PZ8 proper.

A4.4. Project 60 modules

The earlier project 60 modules are compatible with project 80 except that the Stereo 60 gives more output then the project 80 preamplifier so the gain of the Z30 and Z50 is less than that of the Z40 and Z60. However, the gain of the Z60 has been kept deliberately low so that it is still compatible with the earlier Project 60.

When using project 80 control modules with Z30 or Z50 the gain of the Z30 or 50 will need to be increased.

A4.5. IC12

It is possible to use an IC12 instead of a Z40. The IC12 should have its gain set to 100 as explained in the instructions.

A4.6. Other Modules

There are other makes of modules available and it is probable that most of these will present no problem when used with Project 80 provided they use a similar power supply voltage and have a negative earth. Such combinations, however, are beyond Sinclair's control and we cannot predict results nor can we advise as to the compatibility.

A5 Alterations and additions to basic layouts

A5.1. Plugs and Sockets

We strongly recommend that you stick to the DIN type plug and sockets as we have, but if you use different types remember that the mechanical mounting on many of these is also a signal connection. If you use a metal chassis this must be insulated or an earth loop will form causing hum, distortion and instability. This in particular applies to jack sockets and phone sockets.

Do not use jack sockets for the loudspeaker: many types cause a short circuit as the plug is inserted or withdrawn and this is undesirable.

A5.2. Headphone socket

A 3 pole jack socket can be used for connecting headphones provided the resistors shown in the diagram are fitted. These resistors will be between 10Ω and 470Ω lower values for inefficient low impedance phones and higher for high impedance types. 220Ω is most often used.

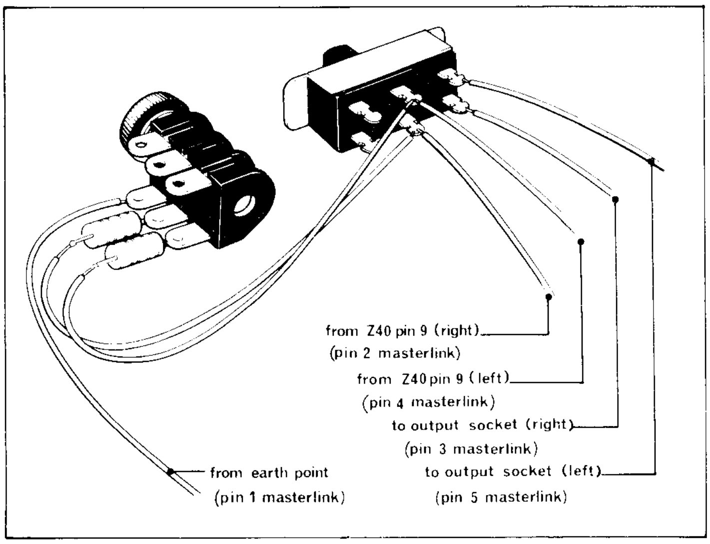

A 5.2.1 Headphone socket wiring

We have used a slide type switch to switch the speakers off. This can be a toggle or other double pole switch but you cannot use the switch commonly fitted to the jack socket or the resistors will not be in circuit.

The headphone socket and switch are part of the output wiring and should be kept well away from the input connections. If you wish to mount it on the front panel, mount it to the right of the preamp and AFU.

On Project 805, when adding headphones, the two links shown below must be broken or the switch on the headphone circuit will not mute the speakers.

A 5.2.2 Detail of break in M/L track

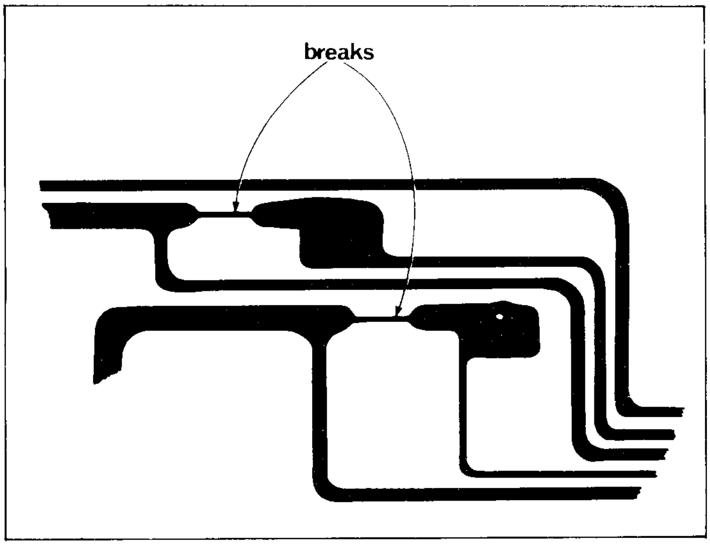

A5.3. Power-on indicator

It is simple to fit an indicator lamp to show when the power is switched on. There are two recommended types of indicator available, both can be obtained with lens for panel mounting to give a decorative appearance.

Neon indicators make sure you purchase a proper mains neon indicator with built-in resistor for direct mains operation.

You will probably want to mount the neon on the front panel with the mains switch — this is alright provided care is taken, and in fact mains switches are available with built-in neon indicators to show when power is on.

The neon indicator should be connected between L & N connections to the PZ5/6 (or the corresponding terminals on the switch).

Do not position the neon near the input circuitry, not only can this induce hum but neons can cause an annoying 'buzz' in the speaker if wrongly positioned, so we prefer the next type of indicator.

LED Indicators are now readily available. These work from dc so must be connected between +ve the power supply, via a suitable limiting resistor, and earth. A current of about 20mA is suitable for most LED's so choose a resistor of:

1K ½w for PZ5
1K5 1w for PZ6
2K2 1w for PZ8

The LED, working from dc, can cause no problem with hum etc., so can be positioned anywhere on the front panel. With the PZ5, however, it will tend to flicker with music because the power supply voltage varies.

We use LED as the indicator for the stereo beacon in the decoder.

A6. Fault finding

It is not the intention, in this section, to teach how to repair a module, but it is quite simple to trace the fault to one particular module.

Is the fault in both channels? Is it the same in both channels? If so, then is it sensible to assume that one component or wire causes the trouble in both channels, or the power supply is at fault. A faulty power supply can cause hum, or non-functioning but is not likely to cause distortion.

Has the fault been present since the project was assembled? If so, it is probably something in the wiring or layout. Or did the equipment fail after some period of use? This is usually one module failing.

If there are apparently different faults in both channels then maybe there are two faults.

The commonest failures are in the power amplifiers — which are subject to most misuse and can fail from overheating — or in the PZ6, which is not itself protected and can fail if one power amplifier fails.

There are 'faults' which are not due to any module, but a combination of layout and wiring. These include hum, motorboating and overheating (sometimes).

Also, sometimes a project does not live up to the constructor's expectations, but it works. Maybe the user did not know what to expect, but more likely the trouble is caused by a bad choice of layout or the other apparatus is incompatible.

The following test procedure will be able to locate for you almost any fault which is likely to arise. Each step gives you either a conclusion or an additional test to make with expected symptoms. If you get one of the symptoms indicated proceed to the test whose number follows the symptom. Further information is given in other sections of the manual as explained.

1. a) Different faults are presented in different **inputs** 2
   b) Fault is not present on tape input, but is present in p.u. and rad 3
   c) Fault is only present on pickup input 4
   d) Fault is only present on tape recording from (but is not present on listening to) record or radio input 5
   e) Fault is only present on rad input 6
   f) The same fault is present on all three inputs 7

2. Ignore one fault (the most minor one) and search for the most obtrusive fault first. e.g. if one input is distorted on one channel and another is completely dead, look for the cause of the dead input 1b to f
3. Either there is a fault in the preamplifier (which is unlikely),
   or two separate faults are present, look for fault on one input at a time 4&6
4. The pickup, or connections to it are faulty or incorrect or the pickup alignment is wrongly set up. With a screwdriver short together pins 3 and 5 on the pickup input socket. If the amplifier modules are correct both channels will perform in the same way.
   a) both work properly, or show exactly the same fault — pickup, DIN plug or wiring to deck is incorrect.
   b) both channels go dead — there is a short circuit in pickup, DIN plug or wiring between them or in the screened wire connecting the DIN socket to the preamplifier.
   c) nature of fault does not change at all. There is a fault in the preamplifier on pickup input.
5. Since the signal in the speakers is clean when listening to records (or radio) there is no fault in the amplifier but the tape recorder is not suitable or wrongly wired or wrongly matched. See section CA7.
6. Tuner or decoder is faulty. Try test 4 on tuner input and if fault is in tuner see section B10.
7. a) Both channels are faulty but do not have the same fault 8
   b) Fault is present on one channel only, the other channel works properly 9
   c) Both channels show the same fault 13
8. Search for the major fault on one channel only, ignore the fault on the other channel (e.g. if one channel is dead and the other working but distorted — look for the cause of the non-working channel first). 9
9. Exchange speakers so that the one which was plugged into the left channel is now plugged into the right channel and vice-versa.
   a) fault remains on same speaker, then this or its wiring is at fault
   b) fault changes to other speaker 10
10. Select pickup (or tuner) and play some music. If you have tested properly this far, only one channel will show the fault you are trying to trace. With a screwdriver short together pins 3 and 5 on the pickup (tuner) input socket. This should have no effect (if it does, go back to test 4). Switch off, connect a wire between pin 5 on right Z40 (60). Switch on again and with both volume controls turned up:
    a) Both channels are dead, then there is a short circuit from pin 5 to pin 6 on the Z40, or from pin 5 on the Z40 or from pin 5 or 6 on AFU (if used) or from pin 14 or 15 on Stereo 80 (if you do not use an AFU), or from the wiring between AFU/preamplifier and Z40 (60) to earth.
    b) both channels work (properly or with some distortion or hum etc). then the Z40's (or Z60's) are working and the fault is in the preamplifier, AFU or its wiring. If you have an AFU: 11
    c) fault remains unchanged 12
11. Short together pins 2 and 3 on the AFU.
    a) fault does not change — AFU or its wiring is faulty.
    b) Both channels go dead — there is a short circuit from pin 2 or 3 on AFU or from pin 14 or 15 on Stereo 80 to earth.
    c) Both channels work, the preamplifier is at fault.
12. The Z40 (Z60) or its wiring is at fault. Exchange all wiring from left Z40 onto the right hand Z40 and vice-versa.
    a) fault is now on other speaker, then this Z40 is at fault.
    b) fault is on same speaker: there is a fault in the wiring to this Z40. Swop wires from left to right, one at a time, to locate it.
13. Both channels are:
    a) Dead 14
    b) Overheating and the system does not work (a loud buzz or hum may be present) 14
    c) Too loud 16
    d) Not loud enough 16
    e) Distorted at high volume only 17
    f) Distorted at all volume control levels 18
    g) Overheating, but system works with or without some distortion or hum etc. 19
    h) Working but high hum level 20
14. a) If you use PZ8: one Z60 has possibly failed or there is a short in the + ve power wiring. The PZ8, detecting this, has shut off causing both channels to go dead (note that symptom 13b cannot occur unless the PZ8 is at fault). Disconnect pin 8 on one Z60 at a time to see which is at fault. If this does not locate the trouble then maybe the PZ8 is at fault or the wiring. 15
    b) PZ6: If there is a short, or one Z40 has failed, the PZ6's internal fuse will have blown. This failure will usually be preceeded by a very loud hum at switch on, followed by a click and silence. See section EB10
       If fuse has not blown and the amplifier is dead: 15
    c) PZ5: a failed Z40, or a short, will not immediately damage the PZ5 but will cause a loud buzz on both channels and overheating in the failed Z40 and the PZ5. The PZ5 may fail only if the fault is sustained. Disconnect pin 8 to each Z40 in turn to locate the fault. If the PZ5 gets hot with all + ve wires disconnected it is faulty
       If the system is dead 15
15. Amplifier is dead. There was no hum/buzz/overheating before the failure nor is there any click or noise at switch-on, nor is there any residual noise or hum in the speaker.
    The mains fuse has blown, or the mains wiring or switch is faulty. A mains fuse will not usually blow for no reason so when replacing check the circuit and take care when switching on.
16. These faults are to do with the amplifier gain, input matching and speaker efficiency. See section CA7 and D7.
17. This is the symptom of a true power limit. Maybe the PZ5 needs to be changed for a PZ6. See section D61.
18. Is the distortion on all inputs?
    Is it on only loud passages of music?
    The symptoms do not indicate a specific fault and could be caused by the tuner, pickup, wiring or preamp.
19. Overheating can be caused by instability caused by layout problems (see section A3) when it will be worse at high treble control settings and high volume settings. It may occur even if no music is played and may be on one channel or both. A 10 F capacitor connected between pins 1 and 8 on each power amplifier may cure this. If the overheating is only present when music is playing at a high volume level, then heatsinking is inadequate (see section D64).
20. Hum cannot arise in the modules themselves and is invariably caused by layout, wiring and screening problems — see section A3. Hum can also occur in the tuner (see section BA10).

Part II: The Individual Modules

B Tuner and Decoder

B6 Power Supply

Both tuner and decoder are designed for the same supply voltage range (23 - 30V) and draw the same current (40mA max at 30V). Power input pin numbering and supply decoupling arrangements are identical: pin 1 is + ve input, 2 is decoupling and 4 and 7 earths.

B6.1 Decoupling

Where an unstabilized supply is used (e.g. PZ5, or where power is drawn from the main amplifier), hum and/or instability may occur. To overcome this a 1000μF 25v capacitor must be connected from pin 2 to earth. The same capacitor can be used for the tuner and for the decoder by connecting both pins 2 together to the capacitor's + ve terminal.

The -ve of the capacitor can be connected to earth on the tuner/decoder box as shown in fig AD.1. However, if this does not entirely remove hum it may be necessary to run a separate wire from the capacitor's -ve to the earth point on the amplifier concerned.

B6.2 High-Voltage Use

For driving the tuner (or decoder) from a voltage above 30 a resistor, R, must be fitted in series with the + ve supply line.

This resistor's value is found from the formula

$$\frac{V - 30}{40} \quad K\Omega$$

When both tuner and decoder are used this resistor is halved in value and both pins 1 are connected together to one end of the resistor whose other end connects to + ve power input.

The resistor should be rated at more than $\frac{1.2 \times R}{1000}$ watts for one module only or $\frac{4.8 \times R}{1000}$ watts for both.

In practise the formula will not give an available value so the nearest value up to 15% higher or lower than that calculated will be used.

Thus for PZ.6 (35v) 220Ω could be used, ½w, for one module.

PZ.6 — both modules — use 120Ω1w

PZ.8 — one module: 470Ω1w

PZ.8 — two modules: 270Ω2w

B6.3 Low-Voltage Use

17 - 22v (well smoothed) may be fed into point 2.

11 - 17 volts use is possible if the following modifications are made:

1. Replace D2 (tuner) or D1 (decoder) by a 9v 1w zener taking care to observe polarity.
2. Replace R17 (tuner) or R2 (decoder) by a 68Ωresistor.
3. Feed 11 - 17v into pin 2.
4. The tracking may need realigning if this is done.

If instability or hum occurs a capacitor must be connected across the new diode — use 1000μF 12v.

B9 Use with amplifiers other than Project 80

Tuner and decoder draw 80mA max between them. This can usually be taken from the power supply inside the amplifier with which they are to be used.

Fig. AB 1 shows an amplifier made from Project 80. Note the use of DIN sockets and in particular that only three pins on the tuner input are normally used. We have therefore connected one of the spare pins to the + ve of the power supply to power the tuner of AD.1.

If your amplifier has a -ve earth and uses DIN plugs you can probably make the same arrangement inside it, or you may have to add an additional insulated terminal inside the amplifier for + ve output.

It is best to add the extra resistor (section B.6.) inside the amplifier so that in the event of a fault in the tuner connecting wire, the amplifier's power supply is not short-circuited and damaged. We have fitted the resistor thus in our example.

BA Project 80 FM Tuner

BA1 Technical Description

The printed circuit aerial coil, T1, provides matching to either 75Ωor 300Ωaerial systems. It is tuned by one half of the matched dual varicap diode VC1. R.F. signals are applied to the self oscillating mixer TR1, TR2 via R3. Printed circuit coil T2 is tuned by the second half of VC1. The amplitude of oscillation across T2 is limited by D1 and the frequency is:

$$F_{LO} = \frac{F_1 - F_2}{2}$$

where F_{LO} is the local oscillator frequency

F_1 is the incoming R.F. frequency

F_2 is the I.F. frequency

BA 2 Tuner circuit

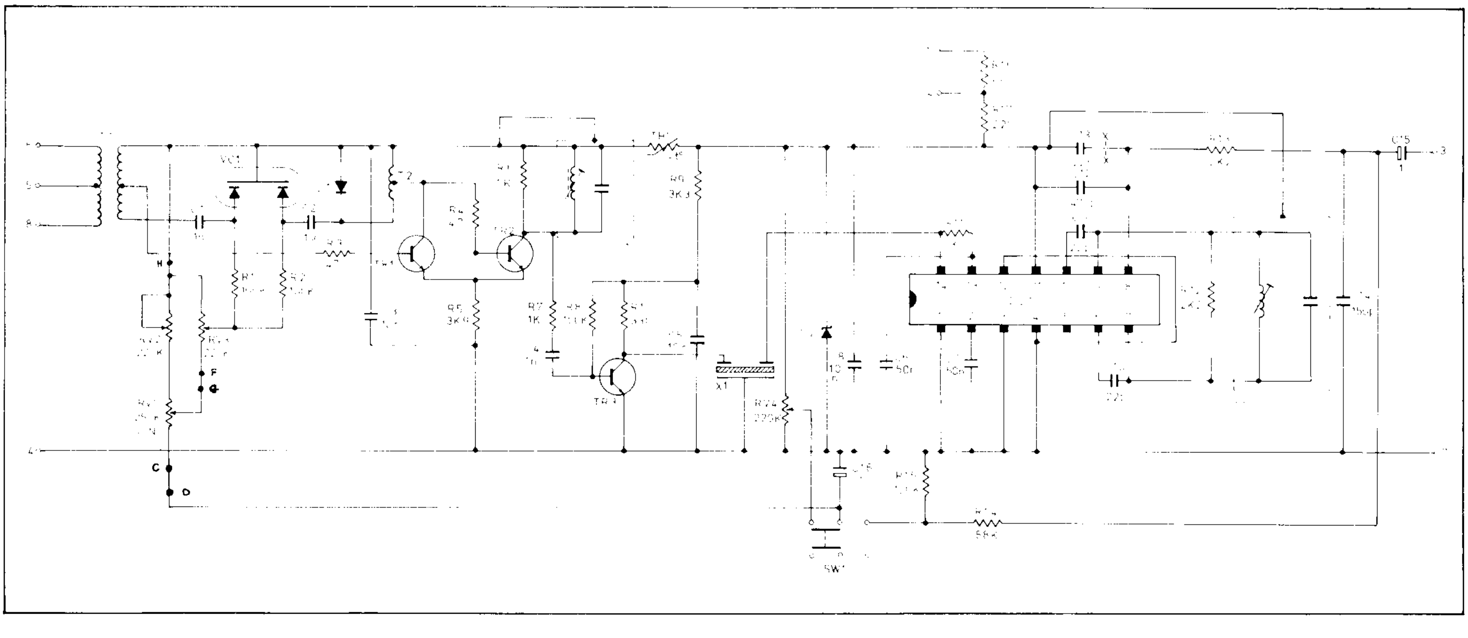

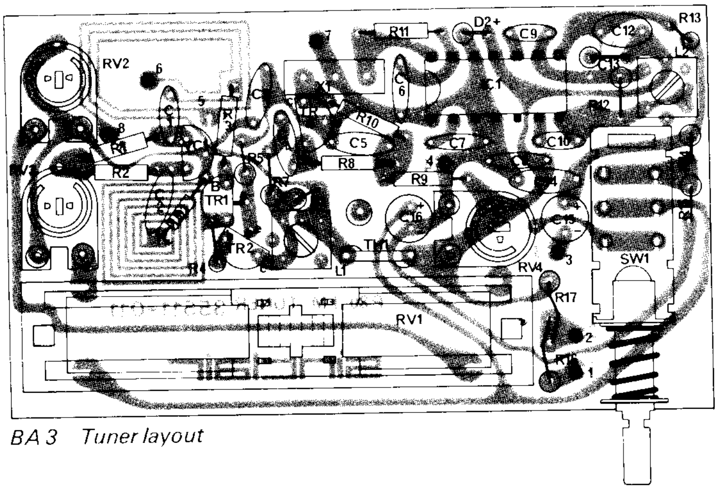

BA 3 Tuner layout

F_2 is fixed by the mid point of the passband of the ceramic filter X1 and is approximately 10.7MHz. Note that the R.F. signal mixes with twice the local oscillator frequency to product the I.F. RV1 is the tuning control, and RV2 and RV3 set the tuning range and tracking: RV2 determining the L.F. and RV3 the H.F. end. Note that the A.F.C. adjustment, RV4, also controls the varicap supply, thus it is necessary to set the A.F.C. before adjusting the tracking. Temperature compensation is achieved by the use of a thermistor, TH1.

The I.F. coil L1 is tuned to the I.F. passband by observing the waveform at the collector of TR2. TR3 amplifies the I.F. output from the mixer and provides matching to the ceramic filter, X1. The output from X1 is fed into the balanced coincidence detector IC1. L2 adjusts the phase of the signal in the detector circuit and should be set to give a symetrical 'S' curve with a F.M. sweep signal applied. IC1 has a limiting circuit before the detector stage which provides a very good degree of a.m. rejection. The A.F.C. voltage is derived from pin 8 of IC1 via R13, R14, R15 and is used to control the voltage applied to VC1. With the A.F.C. switch out RV4 provides the reference voltage.

De-emphasis of 50μS is fixed by C13. Should 75μS de-emphasis be required (North America) a 1200pF capacitor should be wired across C13. For stereo operation with any decoder, C13 must be disconnected by cutting across the printed circuit at points marked 'X'.

The supply rail is stabilised at 12 volts by the zener diode D2.

BA4 Typical Performance

Size	85 x 50 x 20mm
Tuning range	87.5 to 108 MHz
Aerial type	75Ωor 300Ω
Sensitivity	5mV for 30db signal to noise (mono)
Audio output	300mV for 75KHz deviation. 100mV for 30% modulation
Output load impedance	not less than 10KΩ
Distortion	< 0.3% at 1KHz and 75KHz deviation
Power requirements	23 to 30v (max. 40mA)

BA5 Connections to the tuner, shown numbered in fig are:

Pin 1 +ve power 23-30v
2 Decoupling (see text)
3 Audio output
4 Signal and power (-ve) earth
5 Aerial centre tap
6 Aerial input
7 Alternative earth
8 Aerial input

BA6 Power supply see section B.6

BA7 Aerials

BA7.1. Connections You may use either a 300Ωone or a 75Ωone. 75Ω is more common in U.K. but 300Ωis used in many other parts of the world.

Our layout (section 4) shows a 75Ωaerial.

For 75Ω: connect screen to pin 5 and the inner core to pin 6. Note that pin 5 is connected by the aerial socket to earth.

For 300Ωinput is fed between pins 6 and 8 — with pin 5 connected to earth direct.

BA7.2. Types of Aerial Ultimately the choice of an aerial will depend upon your local signal strength. Your local radio dealer should know what signal strength exists in your area, or in U.K. the BBC engineering information service provides details of signal strength and coverage of their transmitters. Stereo reception requires a much better aerial system than does mono reception.

It is hardly possible to use too good an aerial and commercially made aerials are available with upto six elements.

For best results the aerial should be mounted as high as possible — preferably on the roof.

A simple diode can be made as shown in fig. BA7.2.1. where two pieces of wire are connected, one to the inner, one to the outer of the coax to form a 'T' aerial, 5' across the tips of its 'arms'. The wire is taped or pinned to a piece of wood.

BA 7.2.1 Simple dipole aerial

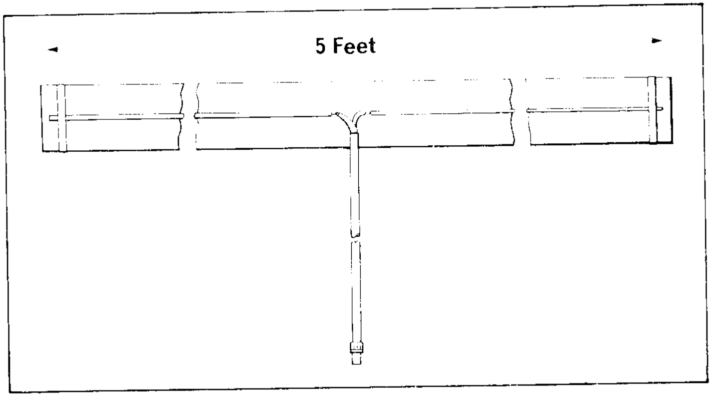

The diagram below shows a simple radio aerial that can be made for use in a car. A piece of brass rod is soldered to the centre connection of a UHF plug and bent 45°. The rod must be insulated from the skirt of the plug, which can be done by filling the plug body with Araldite or similar epoxy adhesive.

BA 7.2.2 Simple car aerial

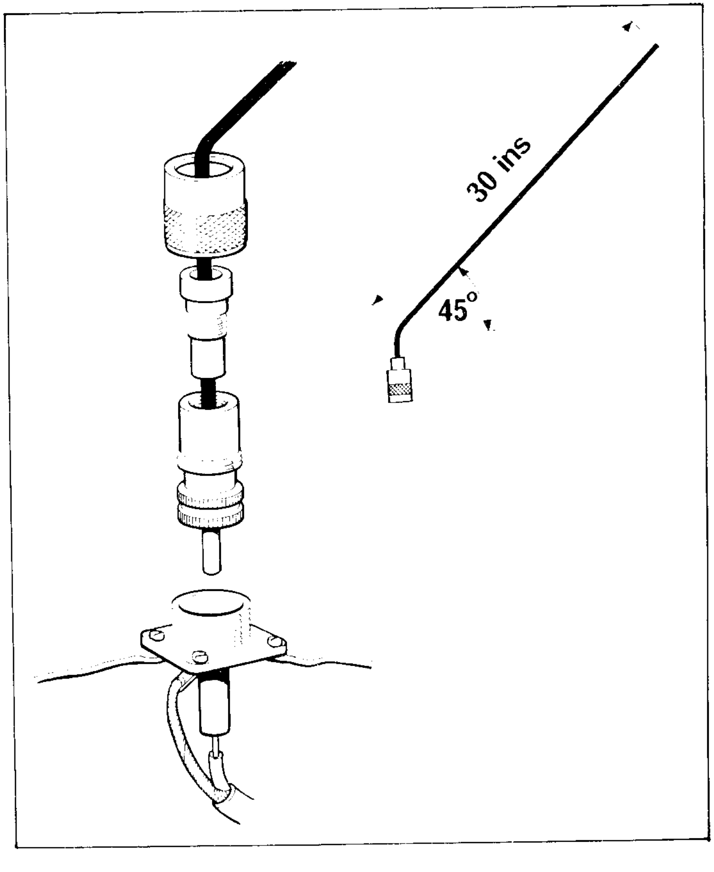

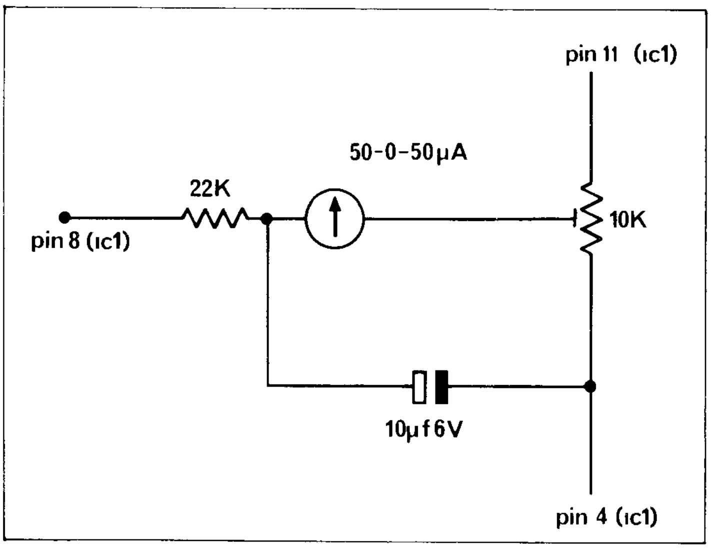

BA 8 Tuning meter

BA8 Fitting a Tuning Indicator

Using the circuit below, it is possible to fit a 50-0-50μA centre zero metre to indicate whether the module is accurately tuned or not. Setting up is quite simple, the 10K preset pot. should be adjusted with the AFC *out* and the module tuned off station, i.e. just noise on the output. The meter should be set to read zero, or centre scale. Apart from the meter and 10K preset pot., the only other components required are a 22KΩ resistor and a 10μF electrolytic capacitor, which can be omitted if the resulting 'flutter' of the meter is not objectionable.

BA9 Switched Tuning and Fine Tune

By breaking the circuit between points DC and GF it is possible to fit preset potentiometers and appropiate switching.

The circuit below shows the details.

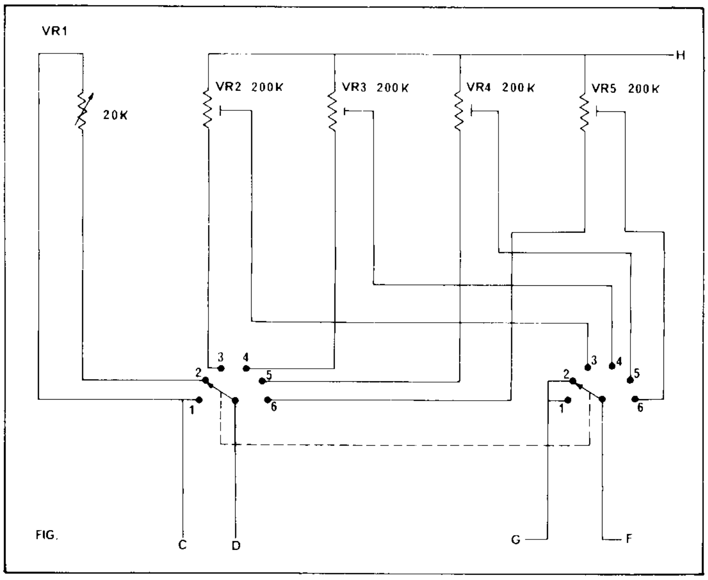

BA 9 Switched and fine tune

Note also that a separate switch position has been used to enable the existing variable control on the module to be used (position 1).

Position 2 on the switch allows a fine tuning control, VR1, to be used in conjunction with the existing tuning.

Switched tuning or fine tune could be a very useful addition for car radio use.

BA10 Common Faults

Hum: caused by inadequate power supply smoothing. Fit the capacitor mentioned in BA.6.

Motorboating: caused by poor power supply stabilization: fit the recommended capacitor.

Interference: especially when the tuner is mounted on wood shortwave interference may occur between stations. This should vanish when a station of good strength is tuned in. It can be reduced however by mounting the tuner on a metal plate (or lining the front of the wood panel with metal foil beneath an insulating layer), and/or by linking pin 5 to pin 7 via a 1nF capacitor.

Noise. Between stations you will get a noise like frying eggs. When on station it should disappear. If it does not, the aerial is probably inadequate. A poor aerial will cause a great increase in noise when stereo is being received.

AFC button throwing the station off tune. This means the set is out of alignment, probably because it has been screwed down too tightly onto a metal surface, or the area of metal indicated in the template has not been removed properly.

Alignment. It should not be necessary to realign the tuner and as the adjustments are interdependant we do not give details in this manual but only on request (S.A.E. please).

Service. Experience has shown that faults in use are rare – Most of the tuners returned to the Service Department for 'repair' are in fact working properly and the fault is in the user's installation.

BB Stereo Decoder

BB1 Technical Description

The Multiplex input signal is fed into pin 3 on the decoder. L2 and C6 are the first 19KHz filters, L1 and C7 are the second. L3 is the 38KHz filter. If this is shorted out decoding does not occur and mono reception results.

When a stereo station is being received the decoder causes the LED to illuminate.

D1 is a zener diode to stabilize the supply voltage.

BB 2 Decoder circuit

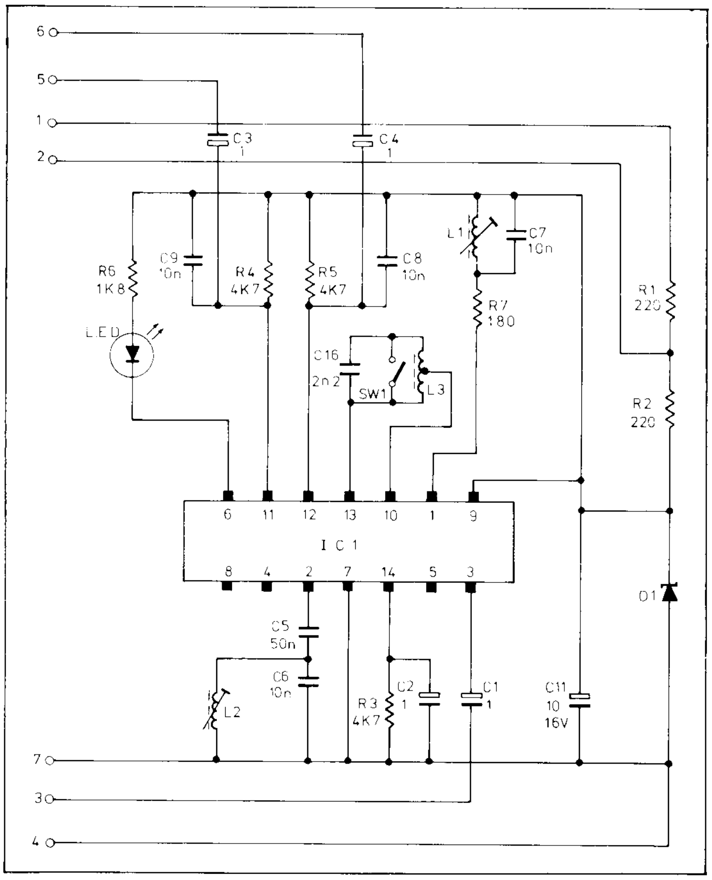

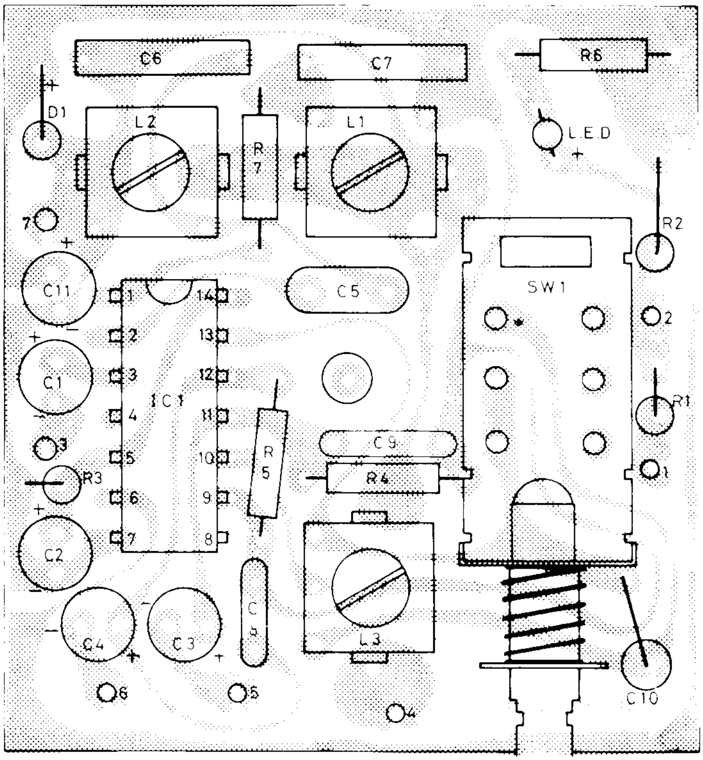

BB 3 Decoder layout

BB4 Typical performance

Size 47 x 50 x 20mm
Input impedance 20K Ω
Load impedance not less than 22KΩ
Separation 30dB minimum

BB5 Connections

1 +ve power (23 – 30V)
2 decoupling (see B6)
3 input (from tuner)
4 Earth (signal & – ve power)
5 Output left channel
6 Output right channel
7 Earth (alternative)

BB6 Power Supply

See section B 6

BB7 Use with tuners other than P80

Although the decoder is intended to work with P80 tuner it will in fact give excellent results with many other tuners and may even give passable results with a VHF transistor portable, which is not intended for stereo reception, provided the signal strength is very good.

BB7.1 Connections

There are only two wires needed between the tuner and decoder:— a signal wire from the tuner Multiplex output to pin 3 and an earth wire from the tuner to pin 7. Connections to the amplifier are made from pin 4 (earth) 5 and 6 via screened wire.

If tuner or amplifier's power supply is –ve earth of the correct voltage a +ve power supply wire may be connected via an appropiate resistor (See section B6) from pin).

Otherwise if a separate power supply (or battery) is used +ve and –ve supplies connect to terminals 1 and 4 respectively. It is possible to run the decoder from a 12V battery – disconnect D1 and connect the 12V in its place.

BB7.2 Tuners without multiplex output

Most tuners which do not have a special multiplex output (or socket for a decoder) were designed for mono reception and even if conversion to stereo is undertaken the quality of the receiver may make good stereo reception impossible. A poor 1F strip will invariably result in poor separation.

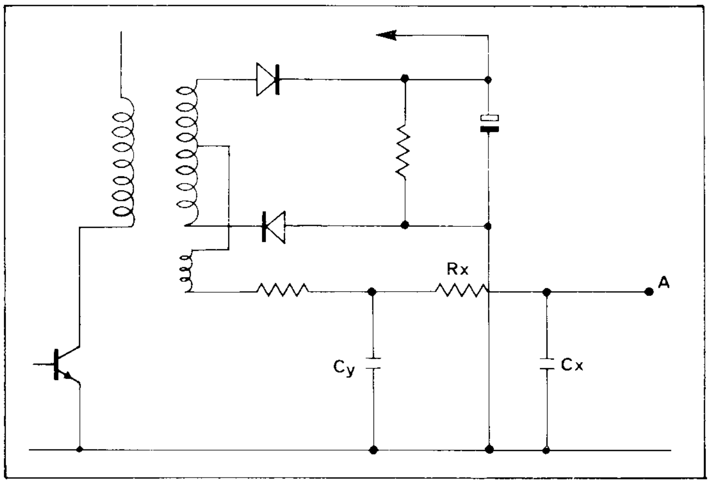

BB 7.2 Typical FM detector Circ.

It is not possible to supply detailed conversion instructions for any particular tuner and the conversion can sometimes be very difficult even for an experienced engineer. The following notes are for guidance only:

When modifying to stereo you must expect to up-grade the aerial: the signal that gives perfect mono may well be totally useless for stereo.

Fig. BB7.2 shows a typical VHF detector circuit. The exact circuit and values vary considerably from set to set but the audio ouput, point A, is usually easy to locate as it feeds (via a switch perhaps) into the volume control. Locate components Cx and Rx, which will have values such that Cx x Rx$\simeq$50,000 where C is in pF and R in kΩ.

Cx is the deemphasis capacitor and must be removed. It may also be necessary to reduce in value or to remove entirely, Cy, which is for 1F rejection, or poor separation may result.

These components can be difficult to spot and it may be necessary to ask the receiver's manufacturer for advice.

The decoder's multiplex input, pin 3, will accept the signal from point A.

BB7.2.1 Transistor sets

Most transistor sets without MPX outputs are transistor portables. The de-emphasis capacitor is in the region of 10μF.

These may only give indifferent stereo and in particular are unlikely to give any results on their built in aerial except in very high signal strength areas.

BB7.2.2 Valved tuners

Mostly these are of older design: the resistors in the discriminator are higher in value than for transistor circuits and the de-emphasis capacitor will be about 1μF.

BB 8 Filter circuit

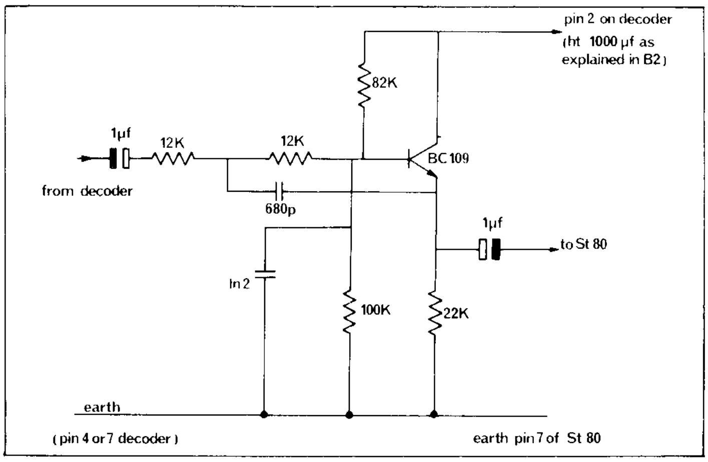

BB8 Tape recording

On stereo transmissions a certain amount of residual 19 and 38KHz switching frequency may remain in the audio output from the decoder. This does not matter for normal music listening but, on tape recording it may interfere, with the recorder's own erase and bias oscillator causing whistles and noise.

If this occurs the circuit of fig. BB8 can be interposed between decoder's output and preamplifier input.

The circuit must be duplicated, one for each channel.

BB10 Common faults

Noise on stereo, not present on mono or when mono switch is in. This is invariably caused by a poor signal strength so a better aerial is needed. Stereo reception is far more critical than mono and requires a much better signal.

Stereo beacon operates between stations this may happen, the beacon can be activated by noise, and does not indicate a fault.

Hum and/ or motorboating: the decoupling capacitor of section B2 is required.

Poor separation: usual cause of this is that the decoder's alignment is disturbed: the alignment is critical and may be disturbed by excessive vibration. Usually only L1 needs re-alignment.

Service. Experience shows that very little goes wrong with decoders, at the most all they require is slight re-alignment.

C Control modules : preamp and AFU

CA Project 80 Preamplifier

CA1 Technical Description

TR1 is a virtual earth stage with C4, C5, R5 and R6 as feed-back components and R1 in series with the inductance of the magnetic pick-up as the source of impedance. The circuit in fact utilises the inharent properties of the pick-up in its equalization : a typical pick-up has an inductance of 450mH and a resistance of 500Ω

For ceramic pick-up the source impedance which matches exactly a ceramic pick-up with typical capacity of 500pF is changed by R2. For radio the network R3, R4, C1 and C2 is switched in. The radio input should be fed from a resistive source of less than 50K. Tape monitor facility is provided between TR1 and the tone controls, which are a conventional virtual earth arrangement around TR2. Since separate controls are supplied for each channel a balance control is not required.

Power supply is to pin 1, decoupled via R19 and C16.

CA4 Typical Performance

Size 260 x 50 x 20mm

Output 100mV ± 3dB for specified inputs.

Input sensitivities & source impedances	P.U.1	3mV	magnetic PU
	"	300mV	ceramic PU
	radio	100mV	25K max.
	tape	30mV	10K max.

Tape monitor output 30mV from 47K

Frequency response 20Hz to 15KHz ± 1dB

Frequency range : bass + 12dB − 14dB at 100Hz

Frequency range : treble + 11dB − 12dB at 10KHz

S/N ratio 60dB

Power requirements 12v to 35v.

Maximum output (30V supply) 2.5V rms.

CA5 Connections

1 +ve power +12 to 35V
2 Right } pick-up point
3 Left } pick-up point
4 Earth } pick-up point
5 Left } radio input
6 Right } radio input
7 Earth } radio input

CA 2 Stereo 80 circuit

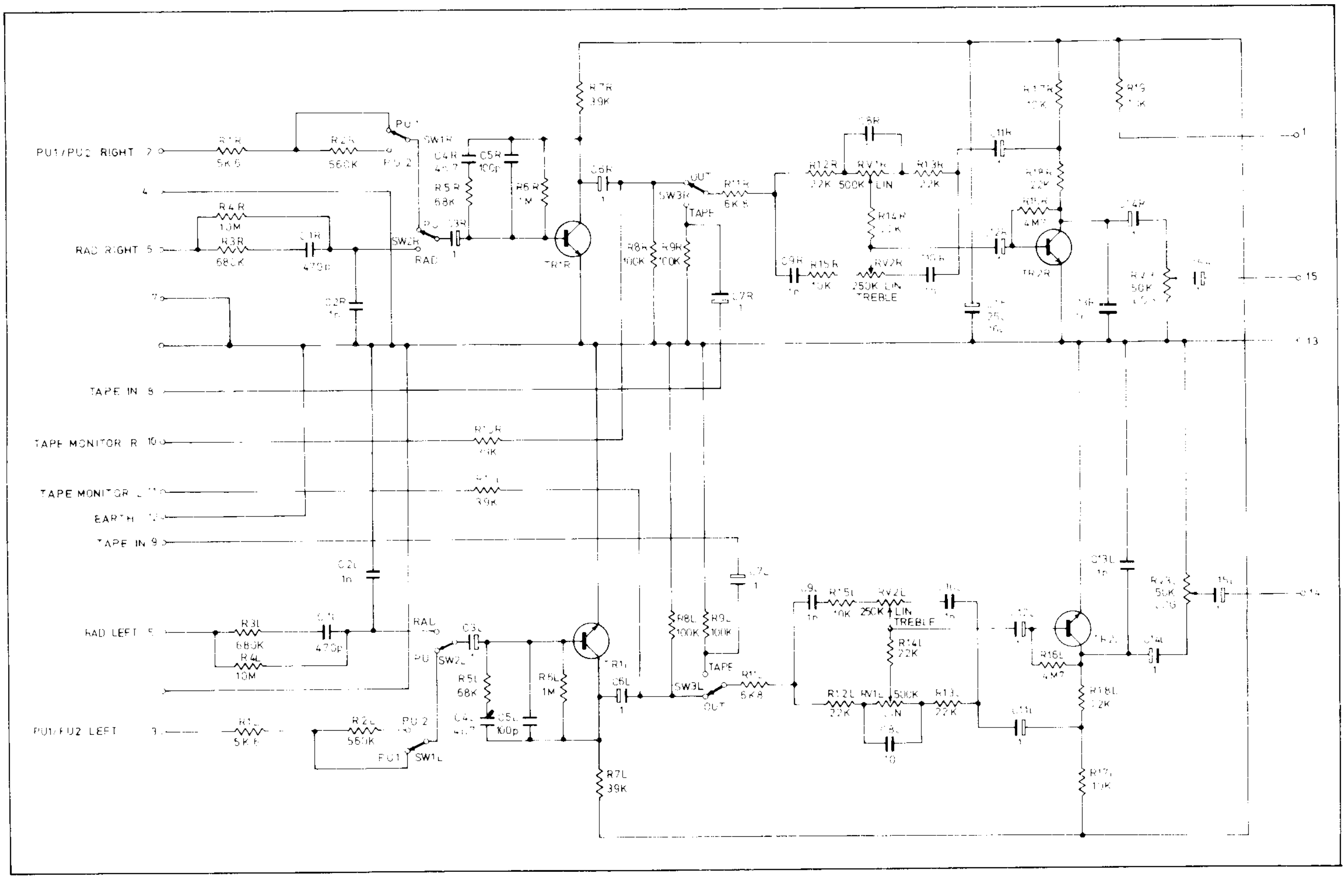

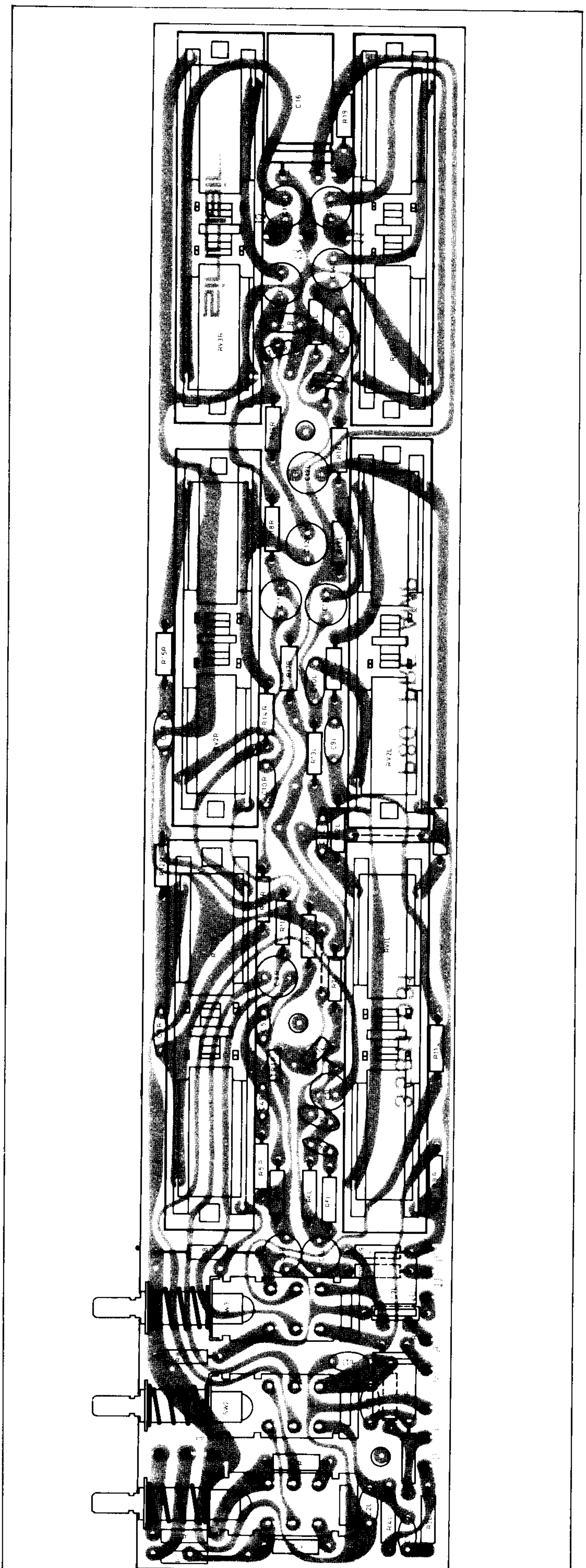

CA 3 ST 80 layout

8 Right input
9 Left input
10 Right output } Tape input and output connections
11 Left output
12 Earth
13 Earth, signal and –ve power
14 Left } Output
15 Right

CA6 Power supply

Although the preamp will function over the full range 12 to 35V the overload margin is reduced as the supply voltage drops: at 12V the maximum output is 1V. Replacing R19 by 1K will increase this to 2V rms.

Above 35 volts C16's voltage becomes exceeded, which will not damage it until severe overload occurs. However it is best to fit an additional resistor in series with pin 1 – use 10K for 40 – 50 volts and 22K for 50 – 70 volts.

CA7 Inputs and Outputs

CA7.1. Magnetic and ceramic pickups: Virtually all magnetic pickups will feed directly into the input with PU1 selected. The only exceptions are low impedance devices, such as the Ortofon, which need a matching transformer. Ceramics feed the input with PU2 selected.

There is a considerable variation in output from pickup to pickup so some of the higher output types may require a very low volume control setting.

CA 7.2. Flat inputs: radio and tape. The radio input has a sensitivity of 100mV and the tape 30mV. Almost every signal source you may wish to use will feed one or other of these inputs, but if you wish to reduce the sensitivity of either one the alternator of CA 7.4. can be used.

CA7.3 Tape output is 30mV. It cannot be increased, but should you wish to reduce it then the attenuator of CA 7.4 can be used.

CA 7.4. attenuator. The figure shows a skeleton preset pot wired with screened leads for input and output. Input lead is from the tuner or tape recorder and output lead feeds to the preamplifier's input.

Used on tape out, this feeds the attenuator's input and the attenuator's output feeds the tape recorder's input. The preset can be any value between 10K and 100K, 22K or 47K generally being best. The preset should be adjusted for best results.

CA8 Mono Use

If a mono source (e.g. tuner without decoder, or a mono tape recorder) is used pins 5 & 6 or 8 & 9 can be joined together. Any input fed to either pin will then be amplified by both channels.

For recording into mono recorder it is quite permissible to join pins 10 and 11 together, this will not affect the channel separation through the amplifier in normal use.

CA 7.4 Altenuator

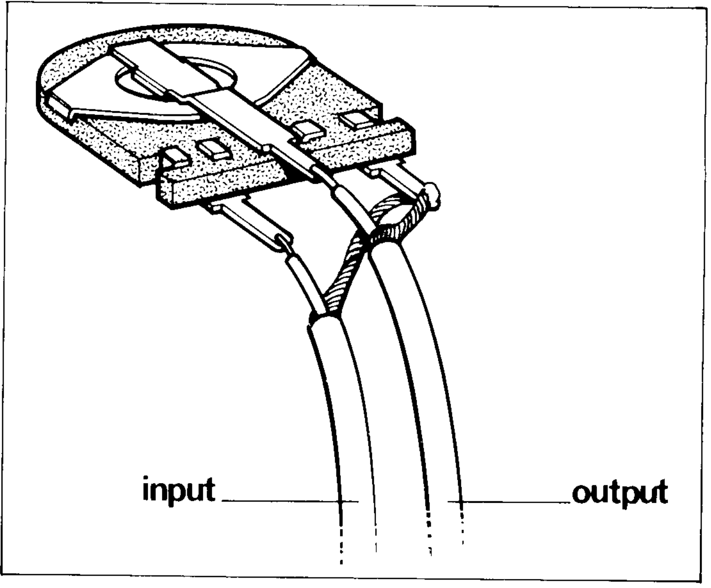

CA10 Common faults

Hum The preamplifier cannot generate hum within itself but it can, if mounted or used incorrectly, pick up hum from outside. The cause of the hum must be located and rectified.

Noise. This consists of a steady fluctuating crackling or 'frying' sound. It is uncommon in the preamp. If the preamp is the cause then it will be present with all inputs disconnected but not with the volume turned fully down. There is an irreducible level of noise on any preamplifier.

Service. The majority of preamplifiers returned for service have no fault: the troubles are caused by the way it is mounted or used.

CB Active Filter Unit

CB1 Technical Description

Tr1 with its associated components is a Sallen and Key type low-pass (scratch) filter whose effect is varied by RV1. Input is to pin 3 (or 2) and no input isolating capacitor is included since this component is in the preamp's output. When driving the AFU from an input other than Stereo 80, a capacitor must be included.

The scratch filter's output, from Tr1's emitter, is fed to the rumble (high-pass) filter arranged around RV2. Output is from pin 6 (or 5).

Supply voltage is fed to pin 1 and decoupled by R7 and C6.

CB4 Typical Performance

Size	108 x 50 x 20mm
Source impedance	10K maximum
Frequency response (filter at 0)	36Hz to 22KHz - 3dB
Low pass (scratch)	−3dB variable 22KHz to 5.5KHz. slope — 12dB per octave.
High pass (rumble)	−28dB at 28Hz. slope 9dB per octave.

CB5 Connections

1 +ve power
2 Input left
3 Input right
4 Earth (signal & −ve power)
5 Output left
6 Output right
7 Alternative earth

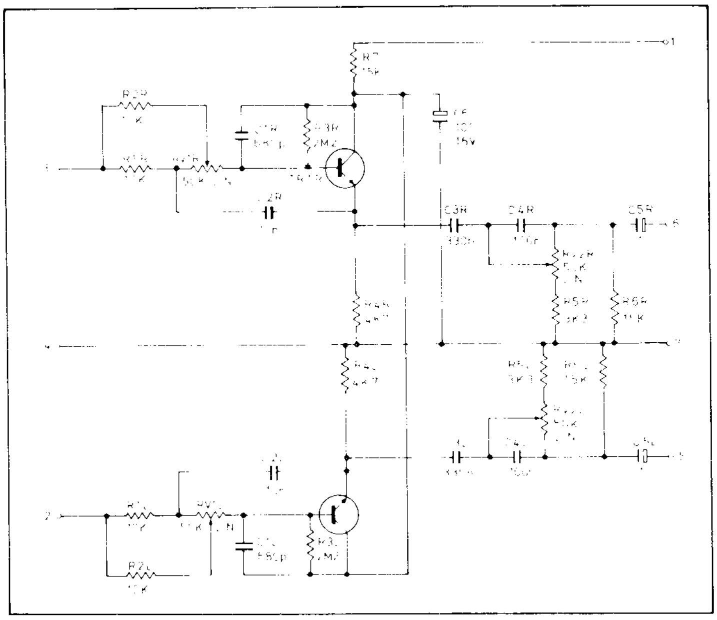

CB 2 AFU circuit

CB6 Power supply

The AFU will operate from below 12V to 50V. The maximum output is voltage dependant and if clipping occurs at lower voltages R7 can be reduced to 6K8 or so.

If the AFU is to be used with an amplifier other than project 80, it can be run from its' own separate battery. In this case R7 can be short-circuited and a 9V battery used — it will last many months as consumption is very small.

CB7 AFU 'override" switch

The layouts that incorporate an AFU leave it permanently in circuit. However even at minimum cut, the AFU does impose a limitation on frequency response — especially when fed from a high impedance. It may be found desirable, therefore to incorporate an override switch to cut the AFU out of circuit. To do this a 4 pole change over switch is needed, wired as in the diagram below. Note that the resistors and capacitors are optional but if they are omitted operation of the switch will cause noise.

CB 3 AFU layout

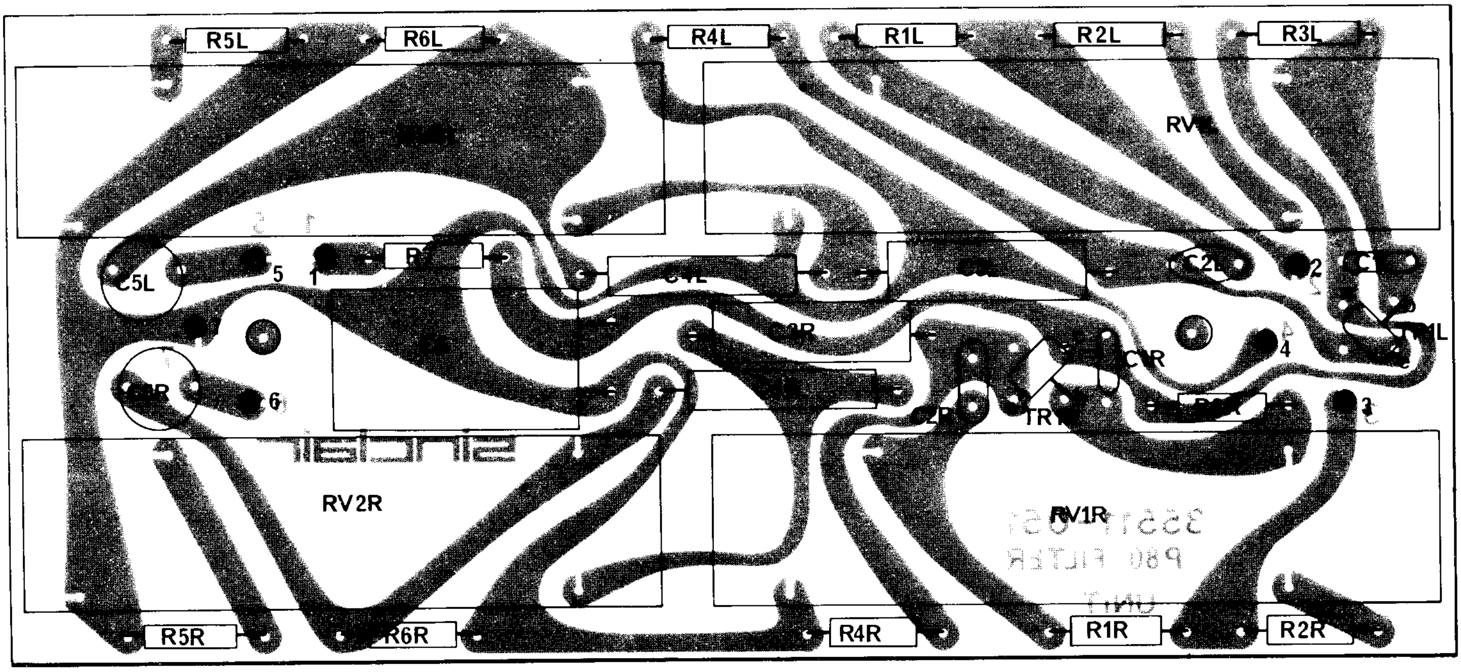

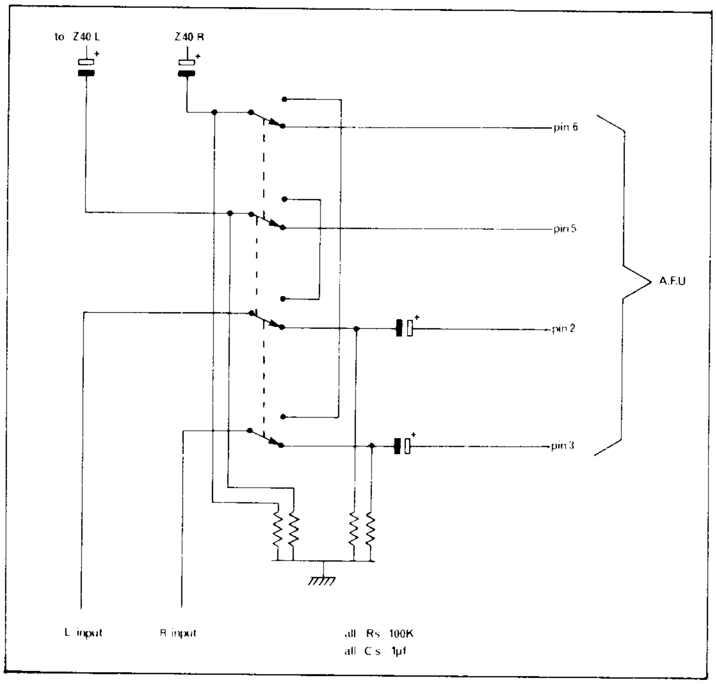

CB 7 Over-ride switch

CB8 Use with amplifier other than Project 80

Most stereo amplifiers include a tape link with monitor facility. The AFU can be arranged to plug into this tape connection and run from its own power supply.

If the amplifier is negative earth then it can be used to power the AFU and a separate terminal can be added for the + ve lead. In the diagram below we have assumed that the 5 pin DIN tape monitor socket has been replaced by a 6 pin type and the sixth pin used for this +ve connection. Fig. CB8.1 shows the AFU wired for this.

Note the use of 1μF capacitors in series with pins 2 and 3. The AFU will not work if these are omitted. Corrected in this way the amplifier's tape monitor switch becomes an AFU override.

Note in fig. CB8.1. and CB8.3. that all screens are connected at one end, but at the other only one screen is connected to the plug/socket. The other screens are left floating.

If the amplifier does not have a monitor facility it must be modified by wiring the appropiate connections and fitting a 6 pin DIN socket. The best place in most amplifier circuits is just before the volume control, which is usually fitted just before the power amplifier as in fig. CB8.2. The connection must be broken as shown.

Fig. CB 8.3. shows how the DIN socket is wired.

In this application it is also possible to fit an AFU override switch (CB7). If the AFU is used off its own battery a 5 pole 2 way switch could be used for this override — the spare pole being used to switch off the AFU.

CB 8.1 AFU wired for tape socket

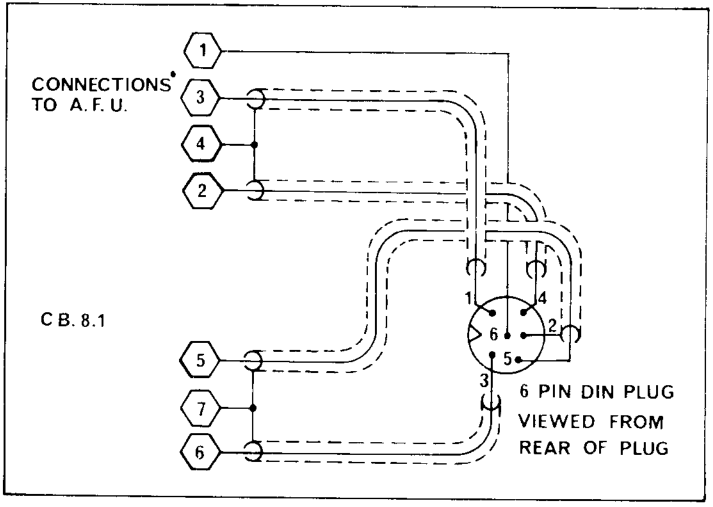

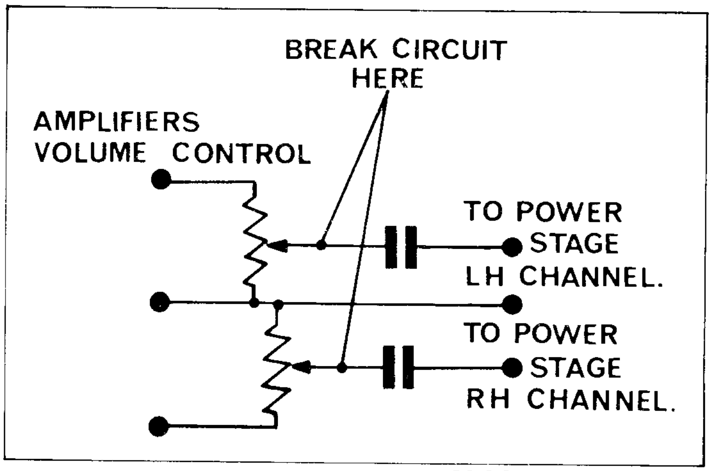

CB 8.2 Detail of amplifier

CB10 Common faults

Lack of effect. Invariably this fault is not caused by the AFU but by the speakers or by subjective effects.

The average person can hear frequencies up to 14KHz — a few people can hear higher than this (up to 19KHz) but this drops off with age and some older people can only hear up to 11KHz or so. But there is not very much sound content in normal music above 12KHz and the speakers may not respond very well — so the AFU may appear only to have effect at maximum cut.

A similar effect occurs at low frequencies, especially with smaller loudspeakers which may have very little response below 150Hz. The rumble filter may then have very little audible effect.

Distortion, controls interact when in use from an input other than Project 80. The AFU does not have an isolating capacitor at it's input, this is included in the Project 80's output. If the feed to the AFU has a direct dc path the control operation will be reduced. See section CB8.

Serice. The majority of AFU's returned for service are not faulty. The users are experiencing a subjective lack of effect as explained above.

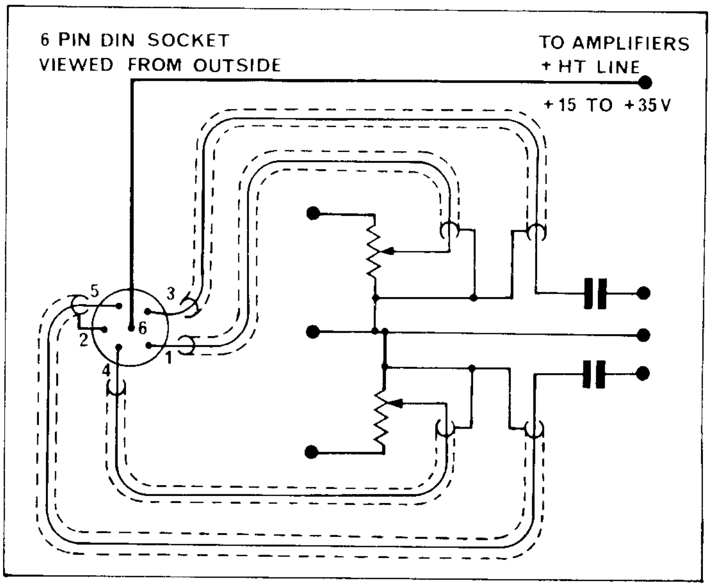

CB 8.3 Wiring for AFU socket

D Z40 and Z60

Z40 and Z60 are very similar in their uses and applications. They are in many applications interchangeable and for the most part will be dealt with together. Information which applies specifically to one of other is included in sections DA and DB.

D5 Connections

Pin 1 Power —ve and output earth
2 Signal earth

3 Signal earth
4 Feedback "earth"
5 Signal input
6 Alternative input "earth"
7 Feedback point
8 + ve power input
9 Output to speaker

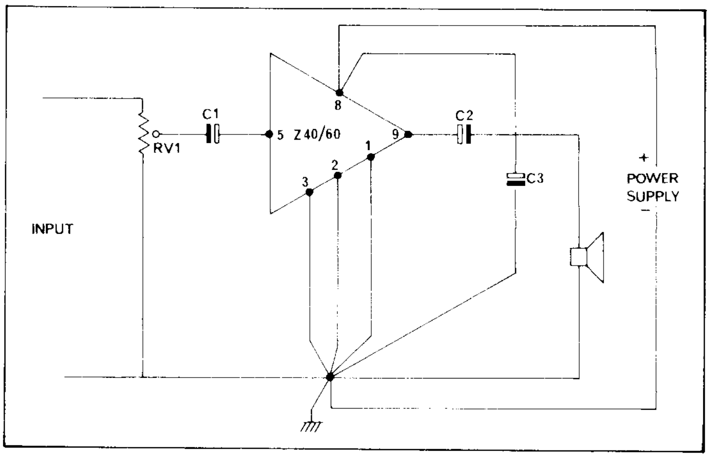

D 5 *Z40/Z60 wiring*

The circuit above shows the connections to one Z40 or Z60 used with a simple volume control.

Note the use of a central earth point with separate wires run to each of the connections shown. This point should be situated so that the wires to terminals 1, 2 and 3 are short (not more than 3").

Note also that with a Z40 only, the wire to terminal 2 can be omitted (2 and 3 are internally connected in the amplifier).

C1: input capacitor. This must be used in all cases except with Stereo 80 or AFU driving the amplifier. 1μF 50V will do for all purposes although 100nf to 10μf can be used.

C2: output capacitor. This is required only with a Z60. Choose 2000μf 50V — although other values can be used with 8Ω or 15Ω speakers (1000μf and 500μf respectively). Reducing the value of this will reduce extreme bass response. The voltage rating should ideally be the same as the DC supply voltage used, but can where size is important be reduced to half the supply voltage.

C2: only needed where a poor power supply is used (e.g. dry batteries) or where leads to power supply are longer than 3" or so. It should be rated at a working voltage not less than the chosen power supply voltage and can be between 10μf and 100μf where longer supply leads are in use. With batteries it should be increased to 1000μf, or even 5000μf with smaller batteries.

RV1: volume control. A log type should be chosen — 47K max. for Z40 or 100K max. for Z60. Lower values can be used, depending upon the signal source feeding the amplifier.

D6 Power supplies, speakers, power and heatsinking

The Z40 and Z60 have a constant gain — that is to say that the volume level from the speaker will be solely dependant upon how loud the input signal to the amplifier is. The gain can be altered as stated in D7.

However, if too much input is given the output signal will start to distort at a certain level. This level of distortion is the 'maximum output power' and is dependant upon the power supply voltage used and the loudspeaker's inpedance.

A graph showing this dependance is given for the Z60 in section DB4, and the curve from the Z40 is similar except that this must not be used above 35v d.c.

Output power is not a measure of the sound level you will hear from the speaker — since in normal use you should never require to use the amplifier anywhere near its maximum power. Although increasing the power supply's rating will increase the maximum power output it will have no effect on the sound at the level you normally use — unless you are using the existing system at its limit.

D6.2 Sound level

The level of sound coming from an amplifier depends upon the 'gain' of the amplifier, the input level and the loudspeaker's efficiency and inpedance. So long as the sound output is undistorted, these are the only factors imposing any limitation. If therefore the sound level from the system is too high one of these factors must be altered. Gain alteration is covered in section D7 and 'input level' in section CA7.

D6.3. Loudspeakers

The two factors which determine how much sound a given loudspeaker will give out with an amplifier are its efficiency and its impedance.

Efficiency is rarely quoted by the manufacturer, but probably varies from 0.5% to 10% — a range of 20 to 1. Other things being equal the 10% efficiency will give 20 times as much sound as the 0.5% one.

Impedance is always quoted and is usually quoted as 4, 8 or 16Ω a change of only 4 to one. The impedance change above from 16Ω to 4Ω could give an increase in sound of only 4 times.

However a speaker does not have a fixed impedance — if you were to actually measure an 8Ω speaker you would get an impedance varying between perhaps 5Ω and 20Ω. Some '8Ω' speakers infact fall as low as 2Ω at certain frequencies.

When choosing a speaker therefore a listening test is to be relied on far more than any written specification: the impedance in particular is only a guide and is not important.

D6.3.1. Permissible impedance

Z40's and Z60's are both quite safe into normal speakers which vary between 4Ω and 16Ω. If speakers at the low end of this range are used for high-volume level there is however a chance of some overheating.

High impedances above 16Ω are rarely met but will do no harm. Both amplifiers are safe into even an open circuit.

Low impedances, i.e. below 4Ω, will, on both amplifiers, cause heating. If the load is applied for too long, or is a direct short-circuit, heating may be excessive and will cause damage. This is especially true of Z40 and Z60 used at or near the top of their permissible operating voltage ranges.

Electrostatic speakers are not suitable for use with the Z40, but can safely be used with the Z60.

D6.4. Heatsinking

The Z60 (or Z40) when working hard, gets hot (the two transistors mounted on the black fin dissipate this heat). If the amplifier is worked too hard and this heat is not removed, these output transistors will get too hot and will fail. The purpose of heatsinking is to remove this heat.

Normally the amplifiers will be assembled into a metal chassis and this will be used as the heatsink. Fig. A1.2. shows some ways in which a Z40 or Z60 can be mounted using a metal block to ensure good flow of heat to the chassis. In high power situations this sinking is very important and it is also important that all contact surfaces through which heat flow (i.e. which contact this block) should be flat and free from burrs round the holes. A light smear of silicone grease or heatsink compound is also advisable.

The amount of heat generated (and thus the need for heatsinking) will increase: with increasing supply voltage
with decreasing speaker impedance.
with increased output volume.

Thus, with a PZ5, you will not normally require any heatsinking. The PZ5 is therefore used in our layout in a plinth.

With the PZ8, heatsinking must be used not only for the Z60's but also for the PZ8 itself.

You will also need better heatsinking where the amplifier is used for high powers rather than the for normal domestic use.

As a test of your heatsinking — feel the black fin of the amplifier. If this, under all conditions, remains only warm, then your heatsinking is adequate. If it is much too hot to touch — then your heatsinking needs improvement.

D6.5. Power supplies

Normally the Z40 will be used with a PZ5 or PZ6 and the Z60 with a PZ8. However, the power supply will determine how much power the amplifier can supply (see section E4) and this will determine heatsinking requirements (section D6.4.).

The table below shows roughly how much current the Z60 takes at various power levels. The Z40 will be similar up to 35V operation.

50v	1.9A (40w)	1A (30w)	600mA (18w)
40V	1.5A (35w)	800mA (19w)	450mA (10w)
30V	1.1A (20w)	600mA (10w)	300mA (5w)
20V	700mA (7w)	400mA (3.5w)	150mA (1.5w)
10V	300mA (1.5w)	200mA (.5w)	75mA (0.3w)

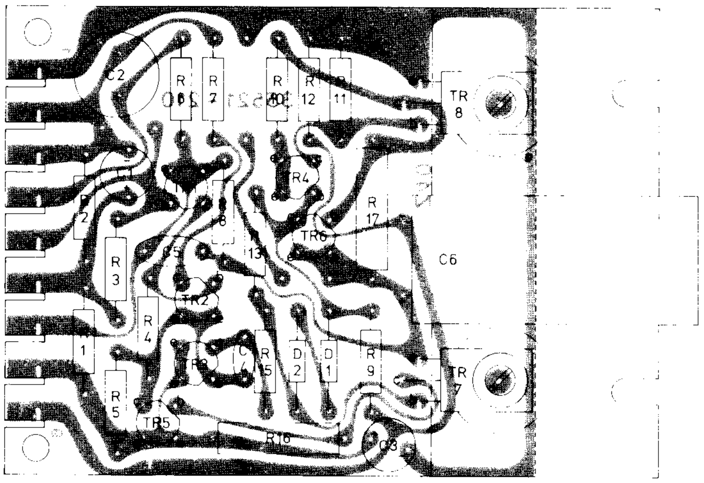

DA 3 Z40 layout

These figures are based on continuous sine-wave operation and in practise current consumption will be far less — say ½ - ¾ for loud pop music and ½ - ¼ for normal domestic listening.

D6.5.1 Battery Operation

Because of the low current consumption batteries are a very suitable power supply; 12V, 18V or 24V are suitable combinations.

Remember however that for a power of 5W from the amplifier the battery may have to give up to 10W, so don't expect too much from a small battery. The battery should be able to supply the current indicated above.

For battery operation the capacitor shown as C3 in D5 *must* be included but its value should be increased. 1000μF is to be considered the minimum value but larger values (5,000μF or 10,000μF) are advisable especially with smaller sizes of battery. This capacitor must be rated at a working voltage equal to or greater than that of the chosen battery.

D7 Gain

As supplied the Z40 has a gain of approximately 110 times and the Z60 about 55 (this means that if a Z60 is put immediately in place of a Z40, the Z60 will not sound as loud). This is done so the Z60 can be used with the earlier project 60 system. In both amplifiers the gain is controlled by two resistors — R8 & R6 in Z40 and R8 & R7 in Z60 — such that the gain in approx.

DA 2 Z40 circuit

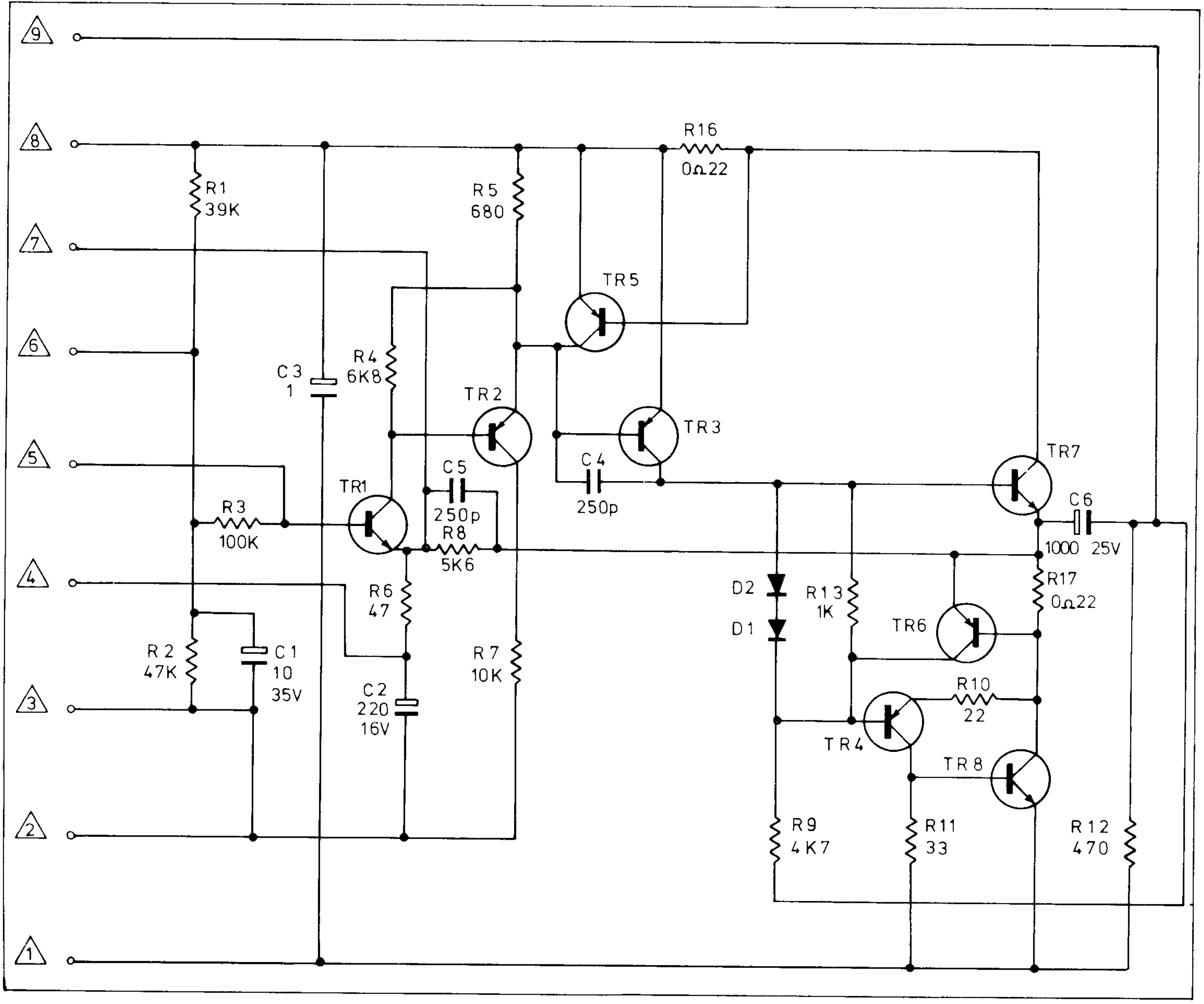

$$\frac{R8 - R6\ (\text{or } R7)}{R6\ (\text{or } R7)}$$

On both amplifiers the gain can be increased by fitting an external resistor across pins 4 & 7: 47 on the Z40 or 1k8 on the Z60 will double the gain. The resistor can be decreased further if more gain is required, but will not normally be less than about 10Ω on the Z40 or 180 on the Z60 (giving a maximum gain of around 500).

D10 Common faults

In any power amplifier the devices most likely to fail are those which do most work – i.e. the output transistors Tr11 & 12. If one or both fail the amplifier and power supply may overheat and it will be obvious that a severe failure has occured.

The protection on Z40 and Z60 will make this sort of failure uncommon – except where heatsinking is inadequate.

Overheating during normal use may simply indicate that heatsinking is inadequate (see section D6.4.) but it can also indicate instability, in which case it may well occur on one channel only. Instability is caused by excessive lead lengths or layouts which place outputs and inputs too close together.

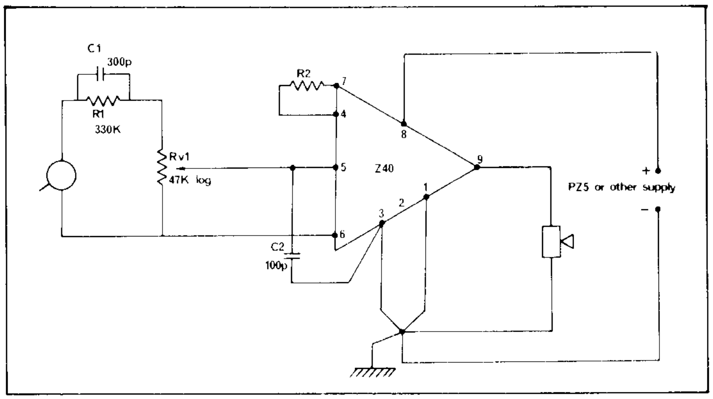

DA 9.1 Amplifier for crystal pick-up

DA Z40

DA1 Technical Description

The input signal is applied to Tr1's base, which compares it with part of the output and amplifies the difference. Tr2 matches Tr1's output to Tr3, and provides a limited maximum amount of drive to Tr3.

On positive-going half cycles Tr3 drives the output transistor Tr7 directly and if the current through Tr7 is excessive a voltage is developed across R16, which turns Tr5 on removing drive from Tr3 and thence protecting the output.

On negative half cycles Tr8 is driven by phase-inverter Tr4. Excess current on this half cycle is detected by R17, causing Tr6 to conduct and reduce the drive to Tr4.

DA4 Z40 performance

Size	55 x 80 x 25mm
Supply voltage	12-35 d.c.
Quiescent current	15mA typical (± 5mA) at 35v.
Power output	12w rms 8Ω at 35v. 20w rms 4Ω at 35v.
Distortion	0.1% at 10w, 8Ω, 1KHz .
Input impedance	90kΩ + 10%.

DB 2 Z60 circuit

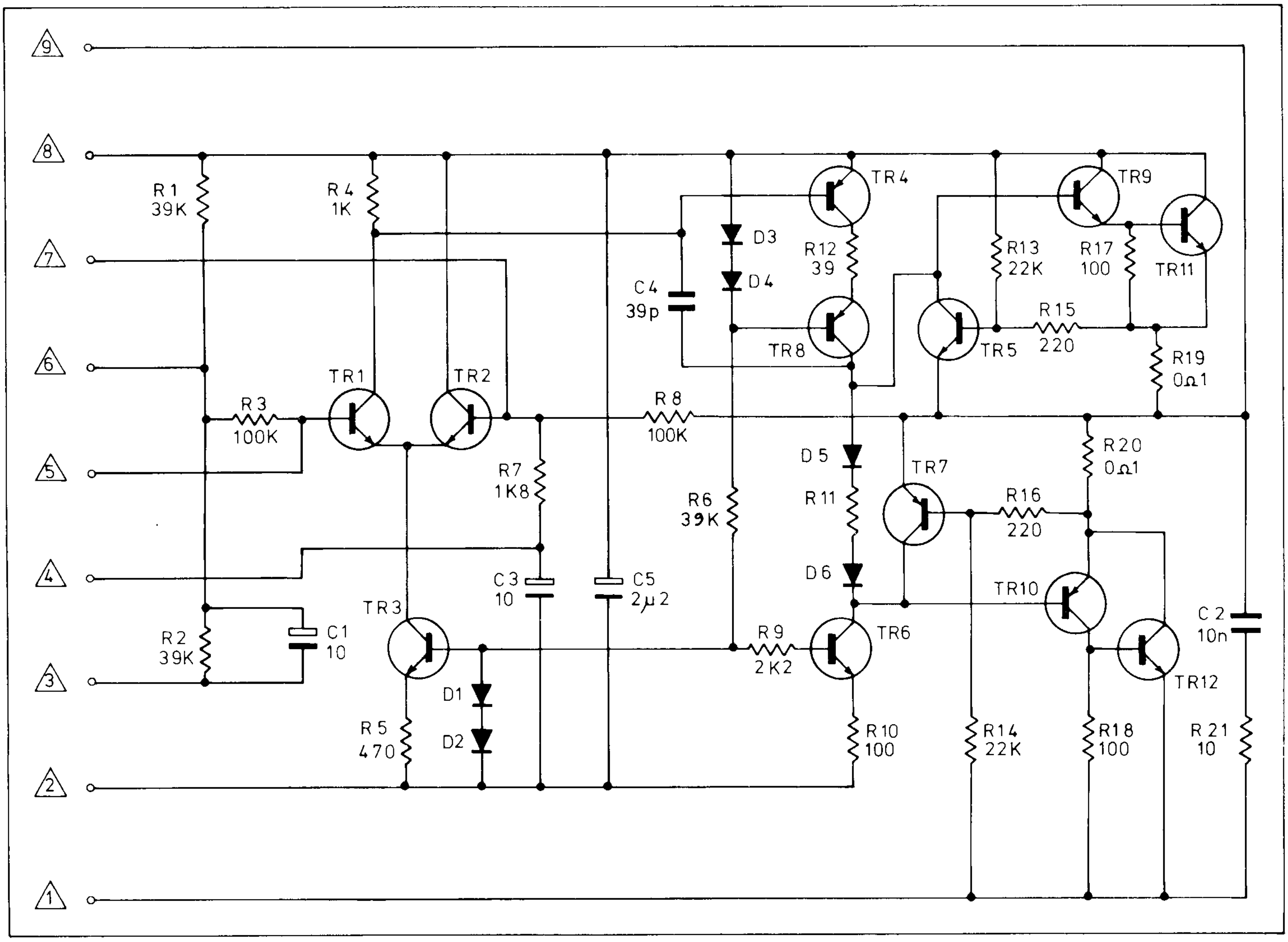

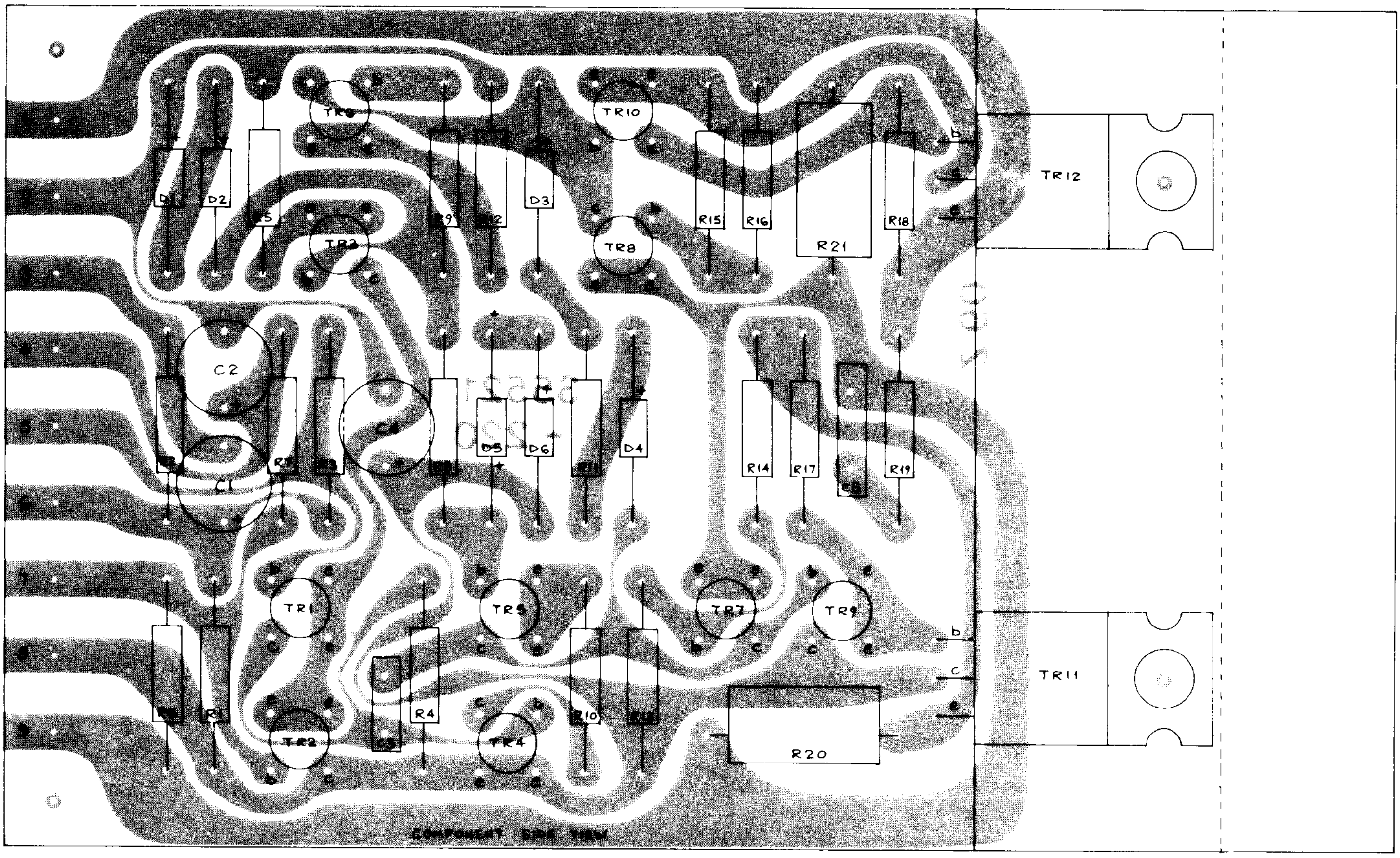

DB 3 Z60 layout

S/n ratio	70 db.
Frequency response	30Hz to 100KHz into 8Ωat 1w.
Voltage gain	110 + 10%.
Permissible load impedance	4, 8 or 16Ω.
Protection	safe open circuit. 3A current limit into low impedance.
Damping factor	50 with 8Ω load.
Power bandwidth	30Hz to 35KΩHz ± 3 db.
Input sensitivity	90 mV (for 12w into 8Ω).

DA9 Applications

The Z60 may be used instead of a Z40 in these applications. However, the Z60's gain is about half that of the Z40 so this may need to be increased.

DA9.1 Amplifier for crystal pick-up

The circuit above will suit a simple record player.

Omit R2 unless more gain is required (see section DA.7).

R1 can be increased to reduce the output. It will also increase bass response.

C1 affects treble: increase it for more treble, reduce for less.

C2 need only be fitted if R2 is added.

DB Z60

DB1 Technical Description

Tr1 and Tr2 from a long-tailed pair used to compare dc and ac conditions on the input with those at the output.

Input conditions are, at dc, the potential on the junction of R1 & R2 and, at ac, the actual input signal.

The output conditions are the dc potential on the output but only a part of the ac level, defined by R7 and R8. Tr1's collector shows an output proportional to the difference in input and output, which is fed to Tr4. Tr8 is in series with Tr4 to provide a current limit so the output transistors have the same amount of drive availability at all supply voltages. Tr8 only limits drive on positive going half cycles.

Tr6 provides a constant current limit on negative half cycles.

Tr3 is a constant current 'tail' for Tr1 and 2 to make sure voltage variation does not alter performance.

The output transistors (Tr11 and Tr12) are driven by Tr9 and Tr10, and the current through Tr11 is sensed across R19. If it rises too much Tr5 turns on, limiting the drive to Tr9. Tr5 is also turned on by excess voltage across Tr11, sensed by the divider chain R13 and R15, so that the limiting is of power in the output transistor.

Tr7 performs a complementary function on the negative half cycle.

DB4 Performance

Size	55 x 98 x 20mm
Supply voltage	10-50 DC
Quiescent current	18mA at 45u approx.
Power output	25w into 8Ωat 50v 40w into 4Ωat 50v
Distortion	.02% at 10w, 8Ωat 1KHz
Input impedance	100k ± 10%
S/N radio	70db
Frequency response	15Hz to 200KHz + 3db
Voltage gain	55 ± 5%
Permissible load impedance	4Ωor greater
Protection	Safe open circuit Supply-voltage dependant current limit into low impedances
Damping factor	depends upon output capacitor used (100 with 2,200μF into 8Ω at 1KHz)

The curve below shows how the power output varies with supply voltage for various loudspeakers:

DB8 Switch on surge

At switch on, depending upon the power supply used, a large surge may be present in the loudspeaker. The PZ8 Mark 3 includes a circuit to limit this surge but with other supplies it can be severe enough to damage a small speaker of 3Ωor so.

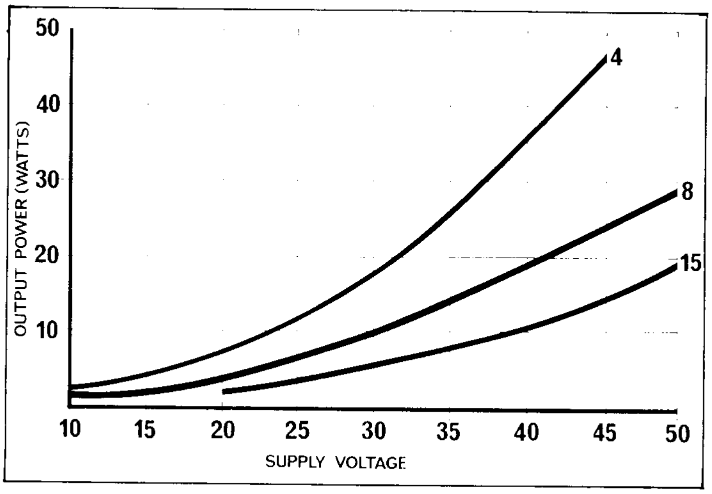

DB 4 Power outlet curve

Fig. DB.8 illustrates an additional circuit which can be added to reduce this surge. One circuit may drive several Z60s, but the capacitor C1 should be doubled for two Z60s, trebled for three, etc.

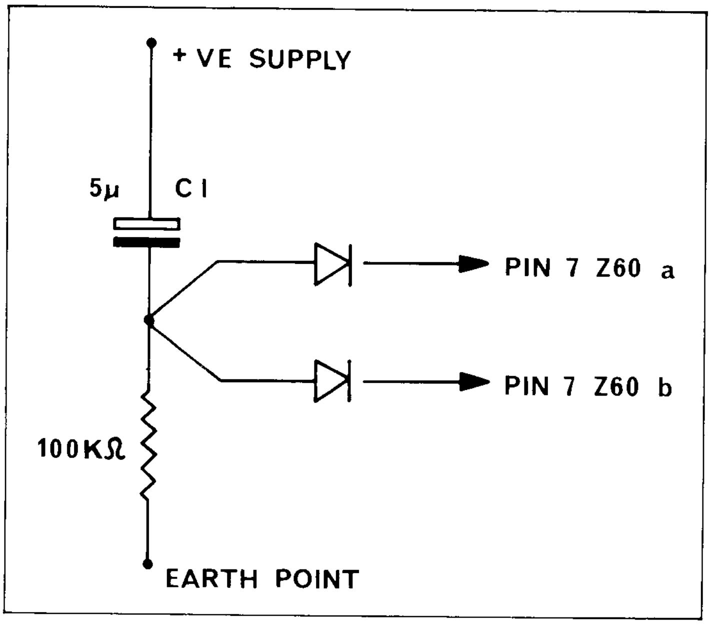

DB 8 Switch-on surge

DB9 Applications

DB9.2 Full Bridge Circuit for 60w

The circuit of DB9.2.1 shows how two Z60s can be connected back-to-back in a full bridge to double the output power. Each Z60 in effect operates into half of the speaker. Speaker impedance should be 8Ω or more, since with an 8Ω speaker each Z60 'sees' 4Ω and will (from fig DB4) give approximately 40w into this 4Ω load (from 50v supply). Thus both together will drive an 8Ωspeaker at up to 80w. (fig DB9.2.1)

DB 9.1.2 Oscillator output

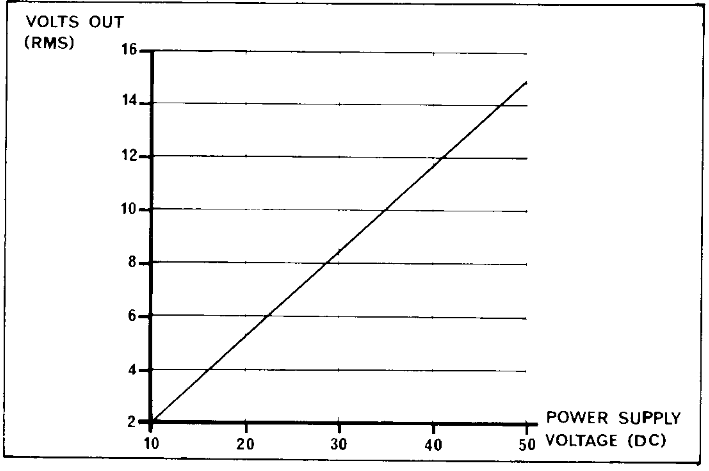

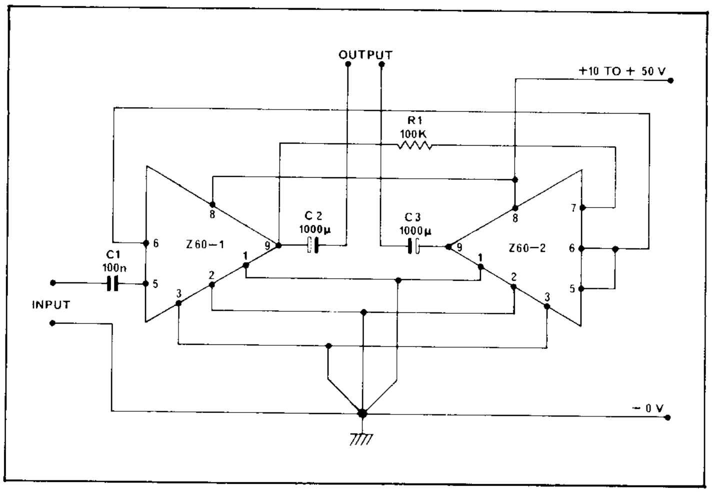

DB 9.2.1 Full bridge circuit

Similarly the circuit can give up to 60w into 16Ω (each amplifier operates into 8Ωand gives 30w).

Care must be taken with the wiring which should be as short as possible. Fig DB9.2.2 shows the wiring of the bridge with the two amplifiers mounted about ½" to 1" apart (one of the heatsink blocks shown in fig A1.2 is ideal). Note in particular that pins 1-1, 2-2, 3-3 are joined together with one wire from each pair to the earth point.

FIG DB 9.2.2

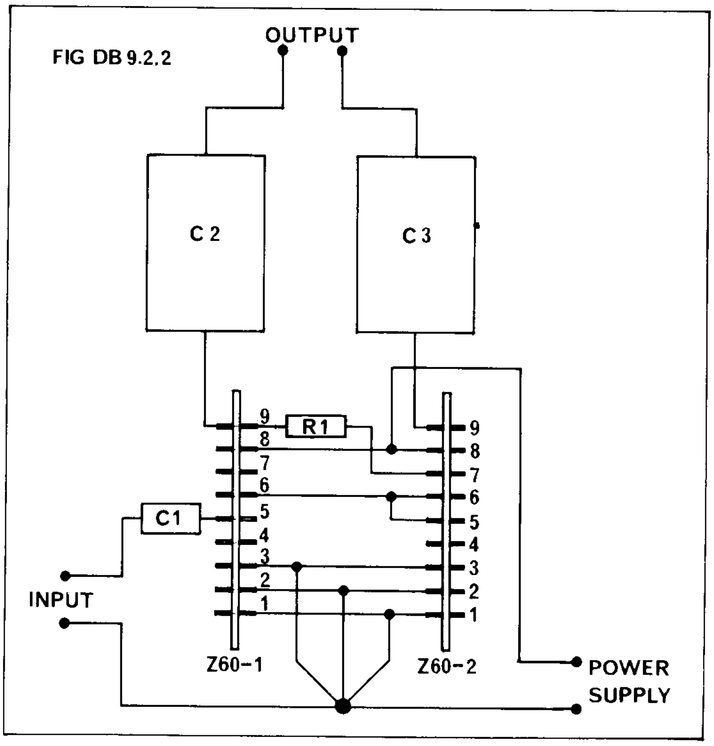

DB 9.2.2 Full bridge wiring

This arrangement can suit two bridges, with a common point for both.

Heatsinking is of prime importance on the bridge — a 60w bridge may have to dissipate 30w itself, so all surfaces in contact must be flat and all holes must be deburred. Silicone grease must be used to ensure good heatflow.

One PZ8 will drive two bridges — but will slightly restrict full output with 8Ω,speakers. If maximum power is required, two PZ8s can be used (when two transformers will be needed), one for each bridge. Two earth points can now be used — one for each bridge/PZ8 combination.

The output capacitors are included to give some protection against low impedance loads at low frequencies, and to ensure that any slight DC imbalance does not cause current through the speaker. Note that if the bridge's gain is to be increased, only the gain of the first Z60 should be altered.

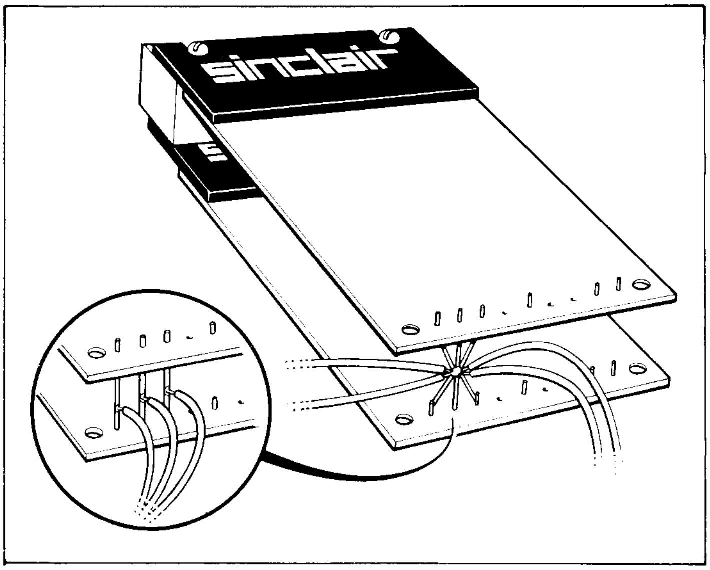

DB 9.2.3 Full bridge mounting

Fig DB9.2.3 shows how two Z60s are mounted on one heatsink block, with a 'floating earth point' between them. Wires go from this point to power supply, chassis, preamp, etc. If two bridges are used with a common power supply, the inset earthing is best. Terminals 1-1, 2-2, 3-3 are connected with one wire from each pair to the common earth point for all four amplifiers.

DB9.4. DC Amplifier

This application is not suggested for the less experienced constructor.

DB 9.4.1 DC amplifier

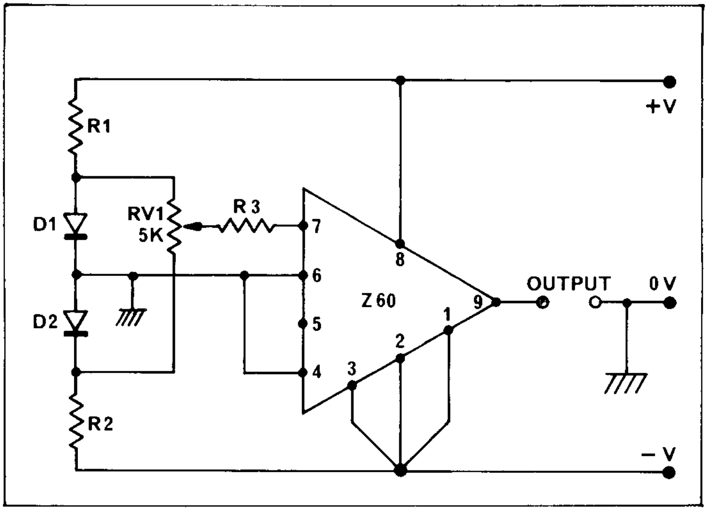

The figure shows the basic connections for using the Z60 as a dc amplifier. Note that a split power supply voltage is used. This supply must be symmetrical but can vary between 5-0-5 and 25-0-25. However, use at high voltages can result in excessive current if the load is of low resistance and this could destroy the amplifier

R1 and R3, D1 and D2 and RV1 are included as a 'set zero' circuit to adjust the zero voltage level on the output. The setting will be somewhat dependant upon the source impedance connected between terminals 5 & 6.

Inputs

Fig. DB9.4.2. a & b show two input circuits — a is a virtual earth inverting mode input and the gain will be approximately

$$\frac{100K}{R4.}$$

b is a non-inverting input, which should be used from a low source impedance to minimise offset voltage. R5 (2K7) can be added if necessary.

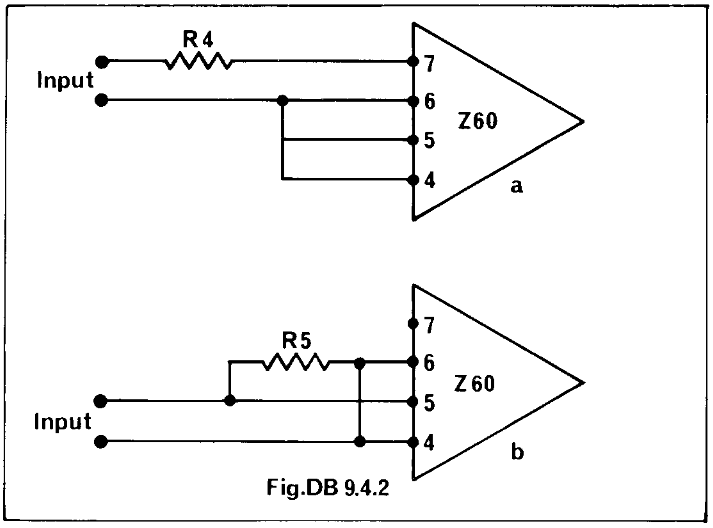

DB 9.4.2 a + b input circuits

Absolute maximum ratings Assuming the amplifier is well heatsinked, so that the transistor case temperature does not rise above 50 C, the transistor maximum dissipation is 50w. This heatsinking will be difficult in practice because of thermal resistance from case through transistor insulating mica and heat fin to the heatsink proper, so the specifications are for guidance only and are not continuous maxima.

Supply voltage maximum 23-0-23v.

Load current maximum 4A.

Load resistance maximum must always be less than $\frac{Vs2}{200}$ and $\frac{Vs}{6}$, which ever is the smaller.

Thus — with a 23v supply, $\frac{Vs2}{200}$ gives 2.6 and $\frac{Vs}{6}$ gives 3.8.

In practice load impedance should be greater than 4Ω

Inductive loads If the load is highly reactive a series resistor is necessary. With motors using brushes a very 'spiky' back EMF is given and the circuit below is suggested.

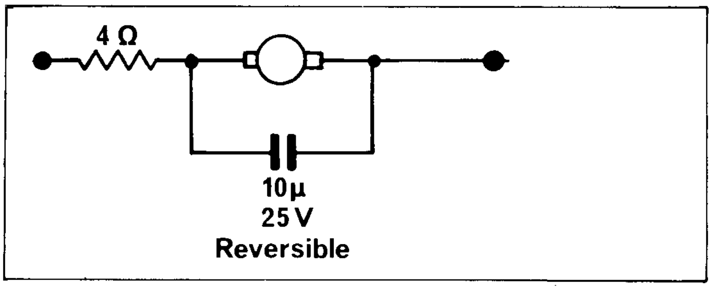

DB 9.4.3 Motor drive circuit

E Power Supplies

E4 Specifications

The power supply chosen will determine the power output obtained from the whole system so that, if a PZ5 is chosen, this will limit the output to around 12w total output into 4Ω.

With the PZ6 the output will be 25w total into 8Ω or 4Ω (e.g. 12w + 12w into 8Ω, 11w +11w into 4Ω but about 20w into 4Ω with only one channel driven).

The PZ8 will drive Z40's fully (if it's voltage is reduced to 35) into any impedance, and will drive the Z60 at full power into 8Ω.

However, into 4Ω the PZ8's current limit starts to operate to give extra protection, the full 40 + 40w will not be reached with both channels driven simultaneously.

Thus in the table below, expected output powers are given for various combinations of power supply. Columns 1 & 2 apply to Z40 but won't be affected much by use of a Z60. Column 3 is with a PZ8 set at 35v, with Z40 or Z60 (Z60 here will show increased power into 4Ω, of 25 & 25w). Column 4 is a normal PZ8 at 50v with Z60's.

		1. PZ5	2. PZ6	3. PZ8 reduced	4. PZ8 50v
Both channels driven	4Ω	6+6	11+11	20+20	30+30
	8Ω	4½+4½	12+12	12+12	25+25
	15Ω	3+3	7+7	7+7	14+14
One channel driven	4Ω	8	20	20	45
	8Ω	5½	13	12	25
	15Ω	4	7	7	14

EA/EB PZ5 & PZ6

EA1 PZ5 Description

The PZ5 consists of a centre tapped transformer feeding a full-wave rectifier with a 2000µF reservoir capacitor, to give a no-load output of approx. 28v.

The transformer has a twin primary for series/parallel operation on 220v or 110v ranges.

EB1 PZ6 Description

The PZ6 uses the same transformer as the PZ5 but feeding a bridge rectifier to give approx. 56v dc on the 1000µF capacitor.

At switch on, there is no voltage on the output, but the voltage on the junction of R1 & R2 forward biasis D1, slowly charges up C2. Tr4's base rises and it passes slowly increasing current to Tr3 & Tr1. The output voltage starts to rise until about 9v when ZD1 becomes forward biased.

Tr4 now compares the zener voltage on its emitter with a proportion of the output voltage fed back from VR1, and adjusts drive to Tr1 & 3 to stabilize the output voltage dependant upon the setting of VR1.

Fs1 is a fuse to give some protection and this will infact blow after a few seconds on a heavy overload if 3 or 4 speakers are in use.

If a direct short circuit occurs across the output however, transistors may fail as well as FS1 – so if the fuse has blown the rest of the circuit should be tested before replacing.

To test the circuit disconnect its + & - outputs, replace FS1 by a 1a slow blow and switch on, with a voltmeter across the output. The voltage will rise quickly to about 15v and will then slow down, stopping at 35v. VR1 should now adjust the stabilized voltage between 20 and 50v approximately.

EA5 Connections

EA5.1. Mains connections

Live (L) and neutral (N) are connected via appropriate switches and fuses to L & N on the PZ5/PZ6. Earth connects either directly or indirectly to the chassis (-ve terminal).

EA5.1.1. Fuse and switch

Whilst the output (dc) of the power supplies does not require further protection it is strongly recommended that a fuse be inserted in series with the mains connections to the transformer. For PZ5 and PZ6 this can be 250mA anti surge. For the PZ8 transformer it should be 500mA anti surge.

EA 2 PZ5 circuit

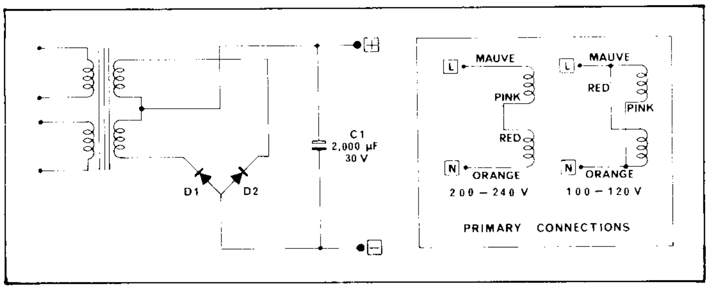

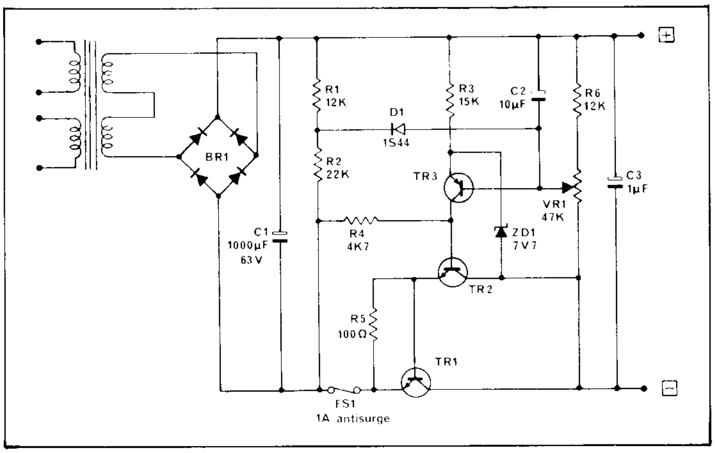

EB 2 PZ6 circuit

If the fuse also provides power to other equipment (e.g. the turntable motor) then this rating will need to be further increased.

A two pole switch should be used in the mains to provide complete isolation.

EA5.1.2. 110v operation

To change from 220v to 110v the red and pink wires from the transformer (at present connected to land B in fig. EA.3) should be unsoldered. Now connect the red wire to the same land as is connected the mauve wire, and connect the pink wire to the same land as is connected the orange wire.

For 110v operation the fuse rating should be doubled.

To change from 110 to 220v the above procedure must be reversed.

EA5.2. Output

Output of the PZ5/6 is between + & – terminals. The – output is isolated from the chassis.

EA 3 PZ5 layout

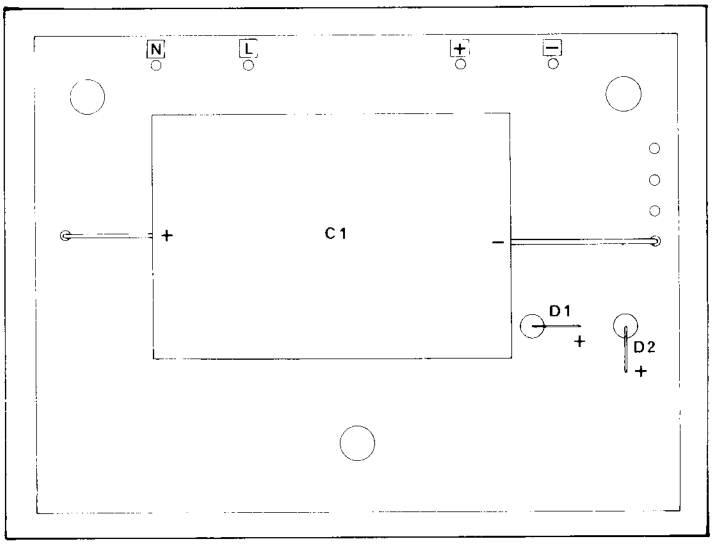

EA10 Common faults – PZ5

The PZ5's circuitry is so simple that there is very little to go wrong with it and it will even survive a short circuit across its output for some period.

Overheating If the transformer gets hot it is usually because one of the amplifiers is at fault. Disconnect both Z40s and when the PZ5 has cooled down switch on again. The PZ5 should remain cool.

Faulty diode. Occasionally one or other diode may fail open-circuit or short circuit. Open circuit failure will cause an increase in hum level (and a hum frequency change from 100 Hz to 50 Hz) but may not be noticed. A short circuit diode will cause overheating. Both con-

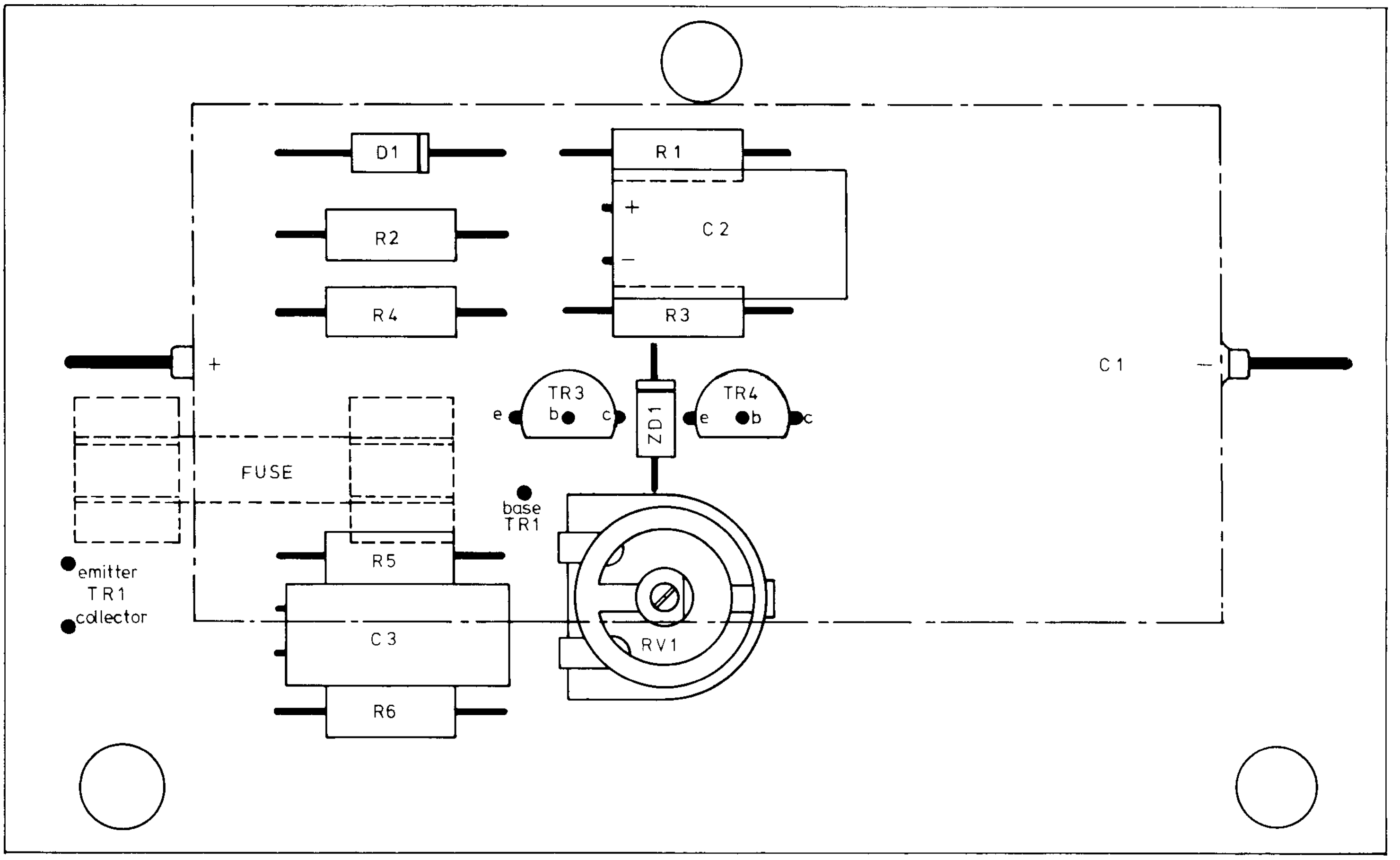

EB3   PZ6 layout

ditions can be tested with an ohm meter, or by disconnecting one wire from the transformer secondary: if the PZ5 functions in this condition then the diode that is not disconnected is working properly.

Service. About two thirds of PZ5s returned for service do not have any fault at all.

EB10 Common faults — PZ6

The PZ6 is not protected, but includes a fuse to restrict damage. If the fuse blows, then it is possible that other damage has occured. It is not safe to replace the fuse and put the PZ6 back in circuit, since other damage can cause the PZ6's voltage to increase to 55v (which is the normal off-load voltage across C1). To test, disconnect the PZ6 from circuit, replace the fuse (1A antisurge) and switch on. Measure the output voltage, which should be adjustable between 20 and 50 approximately. If this is correct, then it is safe to test the PZ6 in circuit.

Fuse repeatedly fails. If speakers are of low impedance (5 or less) and the volume os turned too high, the fuse will fail with no other damage occuring. If this happens the fuse may be uprated to 1.25A antisurge. If the mains fuse repeatedly fails, then the extra equipment driven off the fuse may be at fault, or the wrong type of fuse may be in use.

Overheating. The PZ6 in use does get quite warm, especially when tuner and decoder are in use from it, or when high volume levels are in use. It is unlikely that a fault causing overheating could occur within the PZ6 without causing severe audible symptons. The PZ6 transformer should not get much too hot to touch.

Service experience shows that PZ6 failure often accompanies failure of one power amplifier. When an amplifier fails, the PZ6 should be checked.

EC PZ8

EC1 Circuit Description

Tr4 and 5 form a long-tailed pair which compares the reference voltage on ZD1 with that present on the slider of VR1. Its output controls the Darlington 'triple' Tr1, 2 and 3 in such a way as to minimize the difference between the two.

At the same time, if the output voltage is at its nominal value of 50v, Tr6 is turned hard on by the reference developed on its base by R10 and R11. The tail current through the differential pair is then limited by the zener voltage, less Vbe in Tr4, across R8. As the output current through Tr1 increases its base voltage increases by virtue of the increasing voltage drop in R1. As the base voltage on the triple rises, R4's current increases, drawing more current through Tr4 until, when Tr4 is conducting the whole of the available tail current the circuit stops stabilizing and the output voltage falls as current limiting occurs. The circuit thus gives a limited current of between 4-6 amps at 50v, see the curve.

If severe limiting occurs the output voltage drops. This could result in over-dissipation in Tr1, but the reduced output voltage causes Tr6 to turn off, through R10 and R11, further reducing the limited current and dropping the output voltage. Positive feedback occurs and the circuit 'trips' into a sensing state when it cannot give more then 200-250mA. Tr1 still dissipates, about 10 watts (200 mA at 50v across it) but D1-D3 are in intimate thermal contact (being mounted on the heatsink below the transistor) and prevent thermal runaway — in fact both the high current and low current limits are reduced slightly when the circuit is hot.

The circuit rests in its sensing state safely — until such time as the overload vanishes, when the output voltage rises and the circuit turns back on again.

An additional attractive feature is the circuitry of Tr7, D4 and C4. Before switch on C4 is discharged. At switch on it charges up through R5 and Tr7s base. The value of C4 is then effectively multiplied by the gain of Tr7 and thus charges very slowly, with it rises the output voltage. Thus to start with, the output current is heavily limited (200mA). It is therefore incredibly gentle to the Z60s, which, depending on output capacitors and speakers, take 2-15 seconds to switch on. During this time many limitations and interactions occur between the slowly rising potential, the slowly increasing current limit, the charging output capacitors, and the switch on performance of the Z60. The noise present in the Z60 may

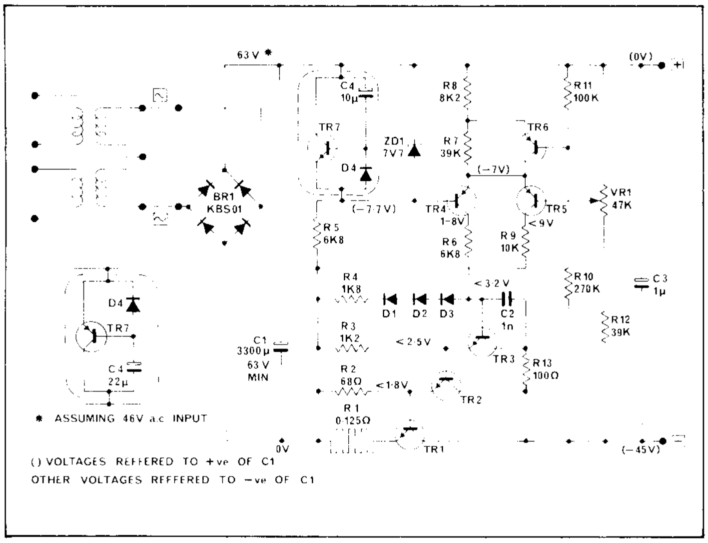

EC 2   PZ8 circuit

be anything from a dull woomph woomph to a zzipp-squeak. It is entirely safe however.

EC4

The curve shows the re-entrant current limiting on the PZ8 Mark 111, and how this behaves with a resistive load. Refer to the technical description for more information.

At A the circuit has switched on and stabilized, under no load. As the resistive loading is increased the current rises until B is reached (5A). Limiting now occurs until at C the output voltage sensor works and the unit switches down the resistor load line to D.

As the resistance is increased current remains constant (limited) but voltage rises to E. The sensing circuit now switches the unit back, up the load line to F.

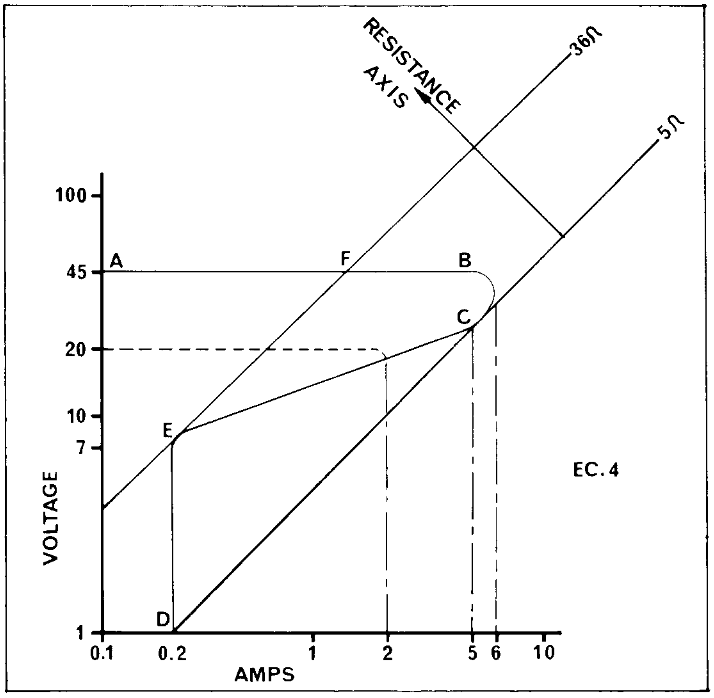

EC 4   Performance curve

EC 3   PZ8 layout

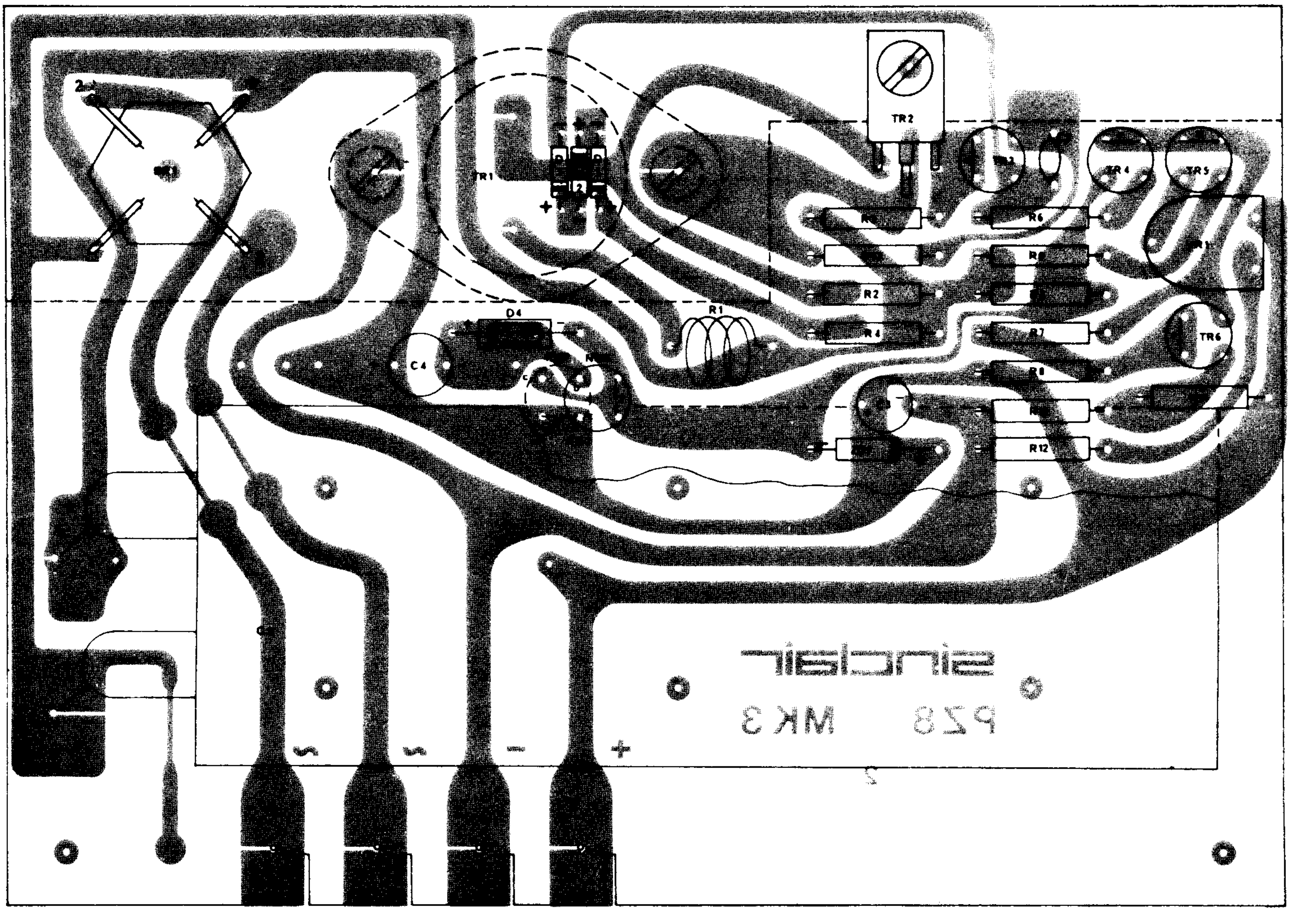

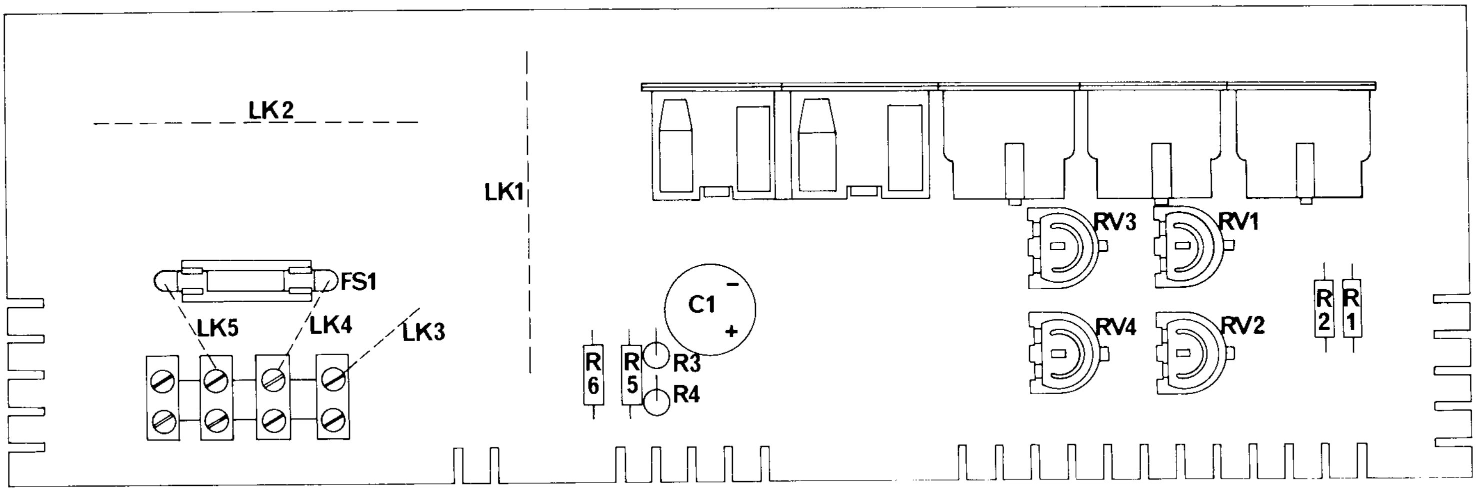

FA 3 Masterlink layout

Note the line from C to E: this can be plotted as the trip current for varying stabilized voltage setting of VR1 — the pecked trace shows the current/voltage curve at 20V.

EC5 Connections

Input. The PZ8 requires an input in the region of 40v ac, which must be supplied from a transformer.

A suitable transformer will be rated at 2A continuous, with an output voltage of not more than 45v maximum. If the output voltage is reduced then the input can be reduced also. Input voltage can be made up to 20% less than the required output voltage. A suitable transformer is the MT104 or 105, available from Henry's Radio and most other component retailers.

ON NO ACCOUNT MUST MAINS BE CONNECTED DIRECT TO THE PZ8.

40V ac input connects to the terminals on the PZ8 marked

Output. + ve and −ve outputs are marked + and −. The −ve output is connected to the heatsink.

EC6 Voltage Adjustment

The PZ8's voltage is adjusted by means of VR1, between a maximum of about 60v and 20v minimum. A voltmeter is required to measure the output voltage if this is readjusted.

EC7 Mounting and Heatsinking

PZ8's mounting and heatsinking requirements are the same as those of the Z60, covered in Section D6.4 and A1.2.

EC10 Common faults

Failure of the PZ8 is rare because of its sophisticated protection circuitry.

No output. PZ8, working into a damaged Z60, may detect this damage and shut itself off, giving no output. This does not indicate a fault in the PZ8. Disconnect one or other Z60 to locate the fault.

Overheating. The PZ8 will overheat if heatsinking is not adequate: see Sections A1.2 and D6.4.

An area of copper on PCB has overheated. The PZ8 has two thin sections of copper on its board, in series with the rectifier, to act as fuses. These can only fail if the rectifier is destroyed. When replacing the rectifier, these can be bridged over with one strand from a 7/0076 flexible wire (fuse rating about 7A).

F Other Parts

FA P.805 Masterlink

FA1 Description

The P.805 masterlink contains input sockets for pickup, radio and tape recorder connections, and speaker output sockets, with connecting points for the other modules in the project.

It also has alternative connections, by means of push-fit wires, for pickup, when the whole project is to be plinth-mounted. Facilities are also provided for connection of headphones.

The masterlink also contains decoupling capacitor for use with the tuner (see Section B6.1) and attenuators (variable resistors) for radio and tape recorder inputs to the Stereo 80. It also contains resistors in pickup input for use with high output cartridges.

FA3 Layout

Note RV1 and RV2 are not included in the masterlink which is matched to the P.80 tuner. If a different tuner, with a higher output, is used, RV1 and RV2 can be added. Use 47K pots.

R3,4,5 & 6 are not fitted: space is left so that a PZ6 or PZ8 can be used (subject to laboratory testing) at a later date.

Appendix

Service and guarantee

All Sinclair Project 80 modules are covered by a 24 month guarantee during which time we will rectify at no charge, any fault within the module which is not caused by misuse, subject to the following conditions.

1. The item must be returned as a module — i.e. not wired into the customer's own box — direct to us, properly packed so as to avoid damage.
2. A letter must be included stating your name and address (block capitals please), where and when purchased, the nature of the fault.
3. The item must not have been damaged by misuse or inexpert attempts at repair, or have been modified either electrically or mechanically from the conditions in which supplied, other than as described in this manual.

   Please note that we cannot undertake to answer letters sent in with equipment for repair, although every effort will be made to do so.

   Under no circumstances can we accept equipment back wired up — unless a previous agreement has been made in writing.

   We regret we cannot undertake to service equipment brought in personally, while-you-wait, unless an appointment has been made in advance.

   Where the equipment is not covered by the guarantee for any reason we will normally be able to service on a standard charge basis. The standard charges are £1.50 each for Z40 and Z60 and £2.00 each for all other modules. These prices do *not* include VAT which must be added. This fee should be sent with the item for repair.

   Spare parts are available for those who wish to do their own service — price lists are available on request. Cash with order only please.

   Naturally spares are free if evidence is shown that the failure is under guarantee.

Templates

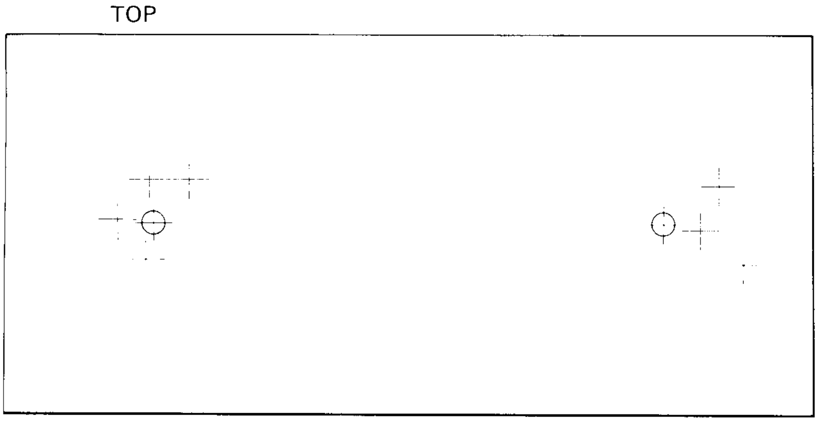

AFU

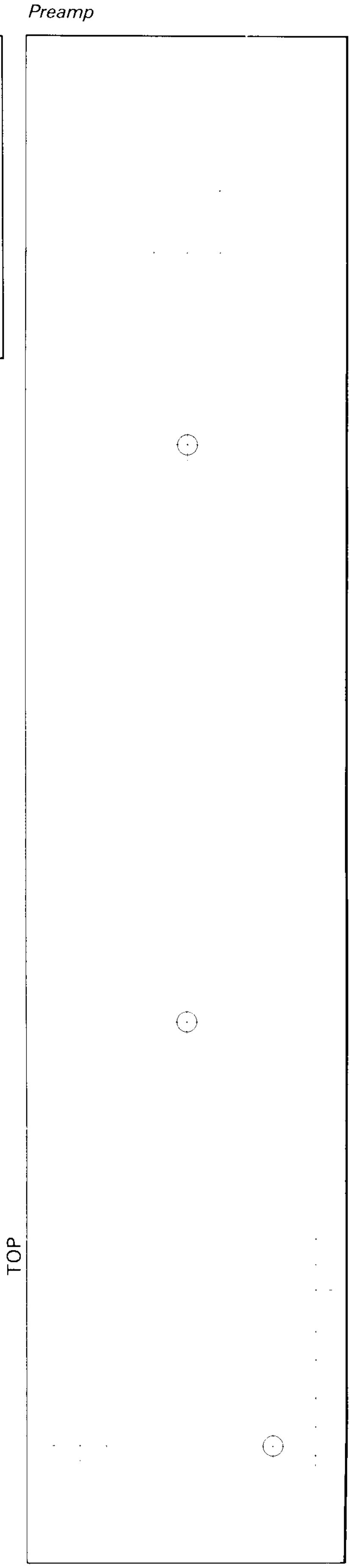

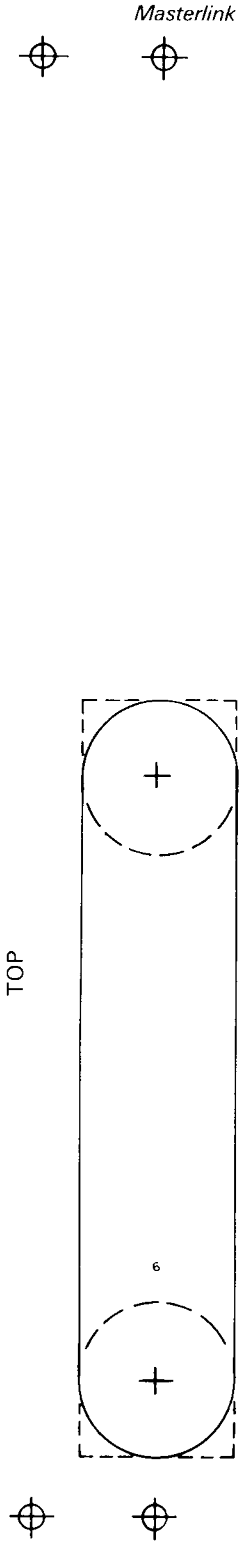

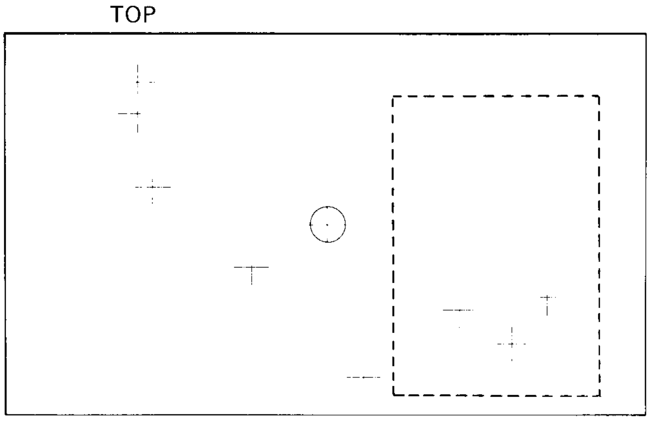

Tuner Remove area marked ---- when mounting on metal.

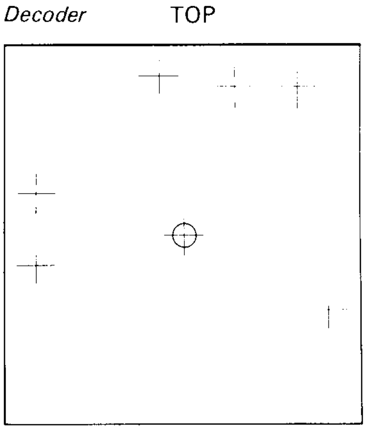

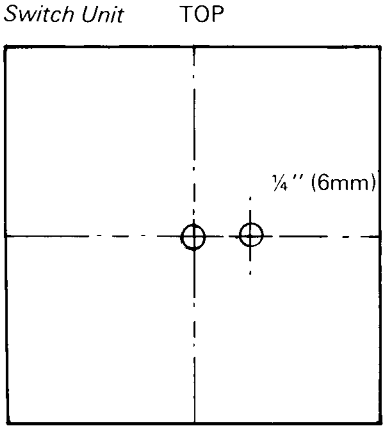

⊕ These holes ⅛″ (3mm). + These holes ³⁄₁₆″ (5mm).

written by Richard J. Torrens
illustrated by Stan North

Published by Sinclair Radionics Ltd., London Road., St. Ives., Hunts PE17 4HJ

Designed and Printed by Photo Precision Ltd., St. Ives, Hunts

Publication number TF01